BIDDING DOCUMENT

for

THE PROCUREMENT OF

Chokbazar Pakhagaun Hundai Serakhet Dhal Nikasa Yojana Sisne-5 &6, Rukum East

National Competitive Bidding (NCB)
Single-Stage: Single-Envelope Bidding Procedure

Sisne Rural Municipality Office, Rukum (East)

Issued on: NCB/SRM/WORKS- 04/083/084

Issued to: All Eligible Bidders
Invitation for Bids No.: NCB/SRM/W- 04/083/084
NCB No.: NCB/SRM/W- 04/083/084
Contract Identification No.: NCB/SRM/W- 04/083/084

Abbreviations

BD ... .Bidding Document

BDF .... Bidding Forms

BDS .... Bid Data Sheet

BOQ ... . Bill of Quantities

COF ..... Contract Forms

DP ... . Development Partners

DoLI... .....Department of Local Infrastructure

e-GP…….Electronic Government Procurement

ELI ... . Eligibility

EEC... .... Evaluation and Eligibility Criteria

GCC ... . General Conditions of Contract

GoN[1] ... . Government of Nepal

ICC ... . International Chamber of Commerce

IFB ……. Invitation for Bids

ITB ... . Instructions to Bidders

JV ... . Joint Venture

NCB ... . National Competitive Bidding

NRs ..... Nepalese Rupees

PAN ... . Permanent Account Number

PPA ... . Public Procurement Act, 2063

PPMO ... . Public Procurement Monitoring Office

PPR ... . Public Procurement Regulations, 2064

PS …….. Provisional Sum

SBD .... Standard Bidding Document

SCC ... . Special Conditions of Contract

TS ... .Technical Specifications

VAT ... . Value Added Tax

WRQ ... . Works Requirements

Table of Contents

Invitation for Bids 1

Part - I Bidding Procedures

Section - I Instructions to Bidders ... ……..3
Section - II Bid Data Sheet……...…….24
Section - III Evaluation and Eligibility Criteria……..……..……..30
Section – IV Bidding Forms……..……....33

Part - II Requirements 44

Section - V Works Requirements …….…….46
Section - VI Bill of Quantities…….…...….52

Part - III Conditions of Contract and Contract Forms 57

Section - VII General Conditions of Contract…….…61
Section - VIII Special Conditions of Contract…….…....92
Section - IX Contract Forms ……..97

Invitation for Bids

Sisne Rural Municipality

Office Of the Rural Municipal Executive, Rukum (East)

Invitation for Bids No: NCB/SRM/WORKS- 04/083/084

Date of publication: 2083-06-29

1. ***Sisne Rural Municipality Office, Rukum East*** invites sealed bids or electronic bids from Nepalese eligible bidders for the construction of **Chokbazar Pakhagaun Hundai Serakhet Dhal Nikasa Yojana Sisne-5 &6, Rukum East** under National Competitive Bidding procedures. The estimated amount for the works is NRs. ***1,11,80,781.63*** *(without VAT & Contingency but including PS).*

2. Eligible Bidders may obtain further information and inspect the Bidding Documents at the office of **Sisne Rural Municipality Office, Rukum East**, Mail Address: sisnermun@gmail.com, Telephone No.:088-413064 or may visit SRM website www.sisnemun.gov.np.

3. A complete set of Bidding Documents may be purchased from the office **Sisne Rural Municipality Office, Rukum East** and the office **Sisne Rural Municipality Office, Rukum East** by eligible Bidders on the submission of a written application, along with the copy of company/firm registration certificate, and upon payment of a non-refundable fee of ***3000*** till **2083-07-18** during office hours. in the account as specified below.

   Name of the Bank: Nepal Bank Ltd. Name of Office: Sisne Rural Municipality, Rukum (East)
   Office Code no.: 80553503300 Account no.: 18903000001001000001
   Rajaswa (revenue) Shirshak no.: ……

4. Pre-bid meeting shall be held at **Sisne Rural Municipality Office, Rukum East** at ***11:00 AM 2083-07-10***

5. Sealed or Electronic bids must be submitted to the office **Sisne Rural Municipality Office, Rukum East** by hand/courier on or before ***12:00 Noon*** on ***2083-07-19.*** Bids received after this deadline will be rejected.

6. The bids will be opened in the presence of Bidders' representatives who choose to attend at ***1:00 PM*** on ***2083-07-19*** at the office of **Sisne Rural Municipality Office, Rukum East.** Bids must be valid for a period of ***90 days*** from the bid submission deadline and must be accompanied by a bid security or scanned copy of the bid security in .pdf format in case of e-bid, amounting to a minimum of ***280,000.00***, which shall be valid for 30 days beyond the validity period of the bid ***(i.e. 120 Days).***

7. If the last date of purchasing and /or submission falls on a government holiday, then the next working day shall be considered as the last date. In such case the validity period of the bid and bid security shall remain the same as specified for the original last date of bid submission.

Part - I Bidding Procedures

Table of Clauses

Section-I Instruction to Bidders……3

A. General ……... 3
1. Scope of Bid 3
2. Source of Funds 3
3. Fraud and Corruption 3
4. Eligible Bidders 6
5. Eligible Materials, Equipment and Services 8

B. Contents of Bidding Document 8
6. Sections of Bidding Document 8
7. Clarification of Bidding Document, Site Visit, Pre-Bid Meeting 9
8. Amendment of Bidding Document 10

C. Preparation of Bids 10
9. Cost of Bidding 10
10. Language of Bid 10
11. Documents Comprising the Bid 10
12. Letter of Bid and Schedules 11
13. Bid Prices and Discounts 11
14. Currency of Bid and Payment 11
15. Period of Validity of Bids 12
16. Bid Security 12
17. Format and Signing of Bid 14

D. Submission and Opening of Bids ……..... 14
18. Sealing and Marking of Bids 14
19. Deadline for Submission of Bids 14
20. Late Bids 14
21. Withdrawal and Modification of Bids 15
22. Bid Opening 16

E. Evaluation and Comparison of Bids 17
23. Confidentiality 17
24. Clarification of Bids 17
25. Deviations, Reservations, and Omissions 17
26. Determination of Responsiveness 17
27. Nonconformities, Errors, and Omissions 18
28. Correction of Arithmetical Errors 19
29. Evaluation of Bids 19
30. Comparison of Bids 20
31. Employer's Right to Accept Any Bid, and to Reject Any or All Bids..... 21

F. Award of Contract ..... …. 21
32. Award Criteria 21
33. Letter of Intent to Award the Contract/ Notification of Award 21
34. Performance Security 22
35. Signing of Contract 22
36. Complaint and Review 22

SECTION– I: Instructions to Bidders

This section specifies the procedures to be followed by Bidders in the preparation and submission of their Bids. Information is also provided on the submission, opening, and evaluation of bids and on the award of contract.

A. General	
1. Scope of Bid	1.1 In connection with the Invitation for Bids indicated in the **Bid Data Sheet (BDS)**, the Employer, as indicated **in the BDS**, issues this Bidding Document for the procurement of Works as specified in Section V (Works Requirements). The name, identification, and number of lots (Contracts) / multiple contracts of the National Competitive Bidding (NCB) are provided **in the BDS.**
	1.2 Throughout this Bidding Document: (a) the term "in writing" means communicated in written form and delivered against receipt through e-GP system or e-mail or fax or courier; (b) except where the context requires otherwise, words indicating the singular also include the plural and words indicating the plural also include the singular; and (c) "day" means calendar day.
2. Source of Funds	2.1 GoN Funded: In accordance with its annual program and budget, approved by the GoN, the implementing agency indicated **in the BDS** plans to apply a portion of the allocated budget to eligible payments under the contract(s) for which this Bidding Document is issued. Or Public Entities' own Resource Funded: In accordance with its annual program and budget, approved by the public entity, the implementing agency indicated **in the BDS** plans to apply a portion of the allocated budget to eligible payments under the contract(s) for which this Bidding Document is issued. Or DP Funded: The GoN has applied for or received financing (hereinafter called "funds") from the Development Partner (hereinafter called "the DP") indicated **in the BDS** toward the cost of the project named in the BDS. The GoN intends to apply a portion of the funds to eligible payments under the contract(s) for which this Bidding Document is issued.
	2.2 DP Funded: Payment by the DP will be made only at the request of the GoN and upon approval by the DP in accordance with the terms and conditions of the financing agreement between the GoN and the DP (hereinafter called the "Loan/Grant Agreement"), and will be subject in all respects to the terms and conditions of that Loan/Grant Agreement. No party other than the GoN shall derive any rights from the Loan Agreement or have any claim to the funds.
3. Fraud and Corruption	3.1 Procuring Entities as well as bidders, suppliers and contractors and their sub-contractors under GoN/DP-financed contracts, shall adhere to the highest standard of ethics during the procurement and execution of such contracts. In pursuance of this; (a) the Employer adopts, for the purposes of this provision, the terms as defined below: (i) "corrupt practice" means the offering, giving, receiving, or soliciting, directly or indirectly, anything of value to influence improperly the actions of another party; (ii) "fraudulent practice" means any act or omission, including a misrepresentation, that knowingly or recklessly misleads, or attempts to mislead, a party to obtain a financial or other benefit or to avoid an obligation; (iii) "coercive practice" means impairing or harming, or threatening to impair or harm, directly or indirectly, any party or the property of the party to influence improperly the actions of a party; (iv) "collusive practice" means an arrangement between two or more parties designed to achieve an improper purpose, including influencing improperly the actions of another

party.

(v) "obstructive practice" means (a) deliberately destroying, falsifying, altering, or concealing of evidence material to an investigation; (b) making false statements to investigators in order to materially impede an investigation; (c) failing to comply with requests to provide information, documents, or records in connection with an investigation; (d) threatening, harassing, or intimidating any party to prevent it from disclosing its knowledge of matters relevant to the investigation or from pursuing the investigation; or (e) materially impeding GoN/DP's contractual rights of audit or access to information; and

(vi) "integrity violation" is any act which violates Anticorruption Policy, including (i) to (v) above and the following: abuse, conflict of interest, violations of GoN/DP sanctions, retaliation against whistleblowers or witnesses, and other violations of Anticorruption Policy, including failure to adhere to the highest ethical standard.

(b) the Employer will reject a proposal for award if it determines that the Bidder recommended for award has, directly or through an agent, engaged in corrupt, fraudulent, collusive, coercive, or obstructive practices or other integrity violations in competing for the contract;

(c) DP will cancel the portion of the financing allocated to a contract if it determines at any time that representative(s) of the GoN or of a beneficiary of DP-financing engaged in corrupt, fraudulent, collusive, or coercive practices or other integrity violations during the procurement or the execution of that contract, without the GoN having taken timely and appropriate action satisfactory to DP to remedy the situation.

(d) DP will impose remedial actions on a firm or an individual, at any time, in accordance with DP's Anticorruption Policy and related Guidelines (as amended from time to time), including declaring ineligible, either indefinitely or for a stated period of time, to participate in DP-financed, -administered, or -supported activities or to benefit from an DP-financed, -administered, or -supported contract, financially or otherwise, if it at any time determines that the firm or individual has, directly or through an agent, engaged in corrupt, fraudulent, collusive, coercive, or obstructive practices or other integrity violations; and

(e) The Contractor shall permit the GoN/DP to inspect the Contractor's accounts and records relating to the performance of the Contractor and to have them audited by auditors appointed by the GoN/DP, if so required by the GoN/DP.

3.2 The Bidder shall not carry out or cause to carry out the following acts with an intention to influence the implementation of the procurement process or the procurement agreement:

(a) give or propose improper inducement directly or indirectly,

(b) distortion or misrepresentation of facts,

(c) engaging in corrupt or fraudulent practice or involving in such act,

(d) interference in participation of other competing bidders,

(e) coercion or threatening directly or indirectly to cause harm to the person or the property of any person to be involved in the procurement proceedings,

(f) collusive practice among bidders before or after submission of bids for distribution of works among bidders or fixing artificial/uncompetitive bid price with an intention to deprive the Employer the benefit of open competitive bid price,

(g) contacting the Employer with an intention to influence the Employer with regards to the bids or interference of any kind in examination and evaluation of the bids during the period from the time of opening of the bids until the notification of award of contract.

3.3 PPMO, on the recommendation of the Procuring Entity may blacklist a Bidder for a period of one (1) to three (3) years for its conduct including on the following grounds and seriousness of the act committed by the bidder:

(a) if convicted by a court of law in a criminal offence which disqualifies the Bidder from

	participating in the contract, (b) if it is established that the contract agreement signed by the Bidder was based on false or misrepresentation of Bidder's qualification information, (c) if it at any time determines that the firm has, directly or through an agent, engaged in corrupt, fraudulent, collusive, coercive, or obstructive practices in competing for, or in executing, a GoN/DP-financed contract. (d) if the successful bidder fails to sign the contract. (e) if the bidder fails to inform or informs after the specified time about the saturation of the maximum number of contracts as per ITB 4.9. (f) a Bidder requests for withdrawal or modification of its bid: (i) after the Bid Submission deadline and during the period of validity specified by the Bidder on the Letter of Bid, in case of electronic submission; (ii) from the period twenty-four hours prior to bid submission deadline up to the period of bid validity specified by the Bidder on the Letter of Bid, in case of hard copy submission. (g) if the bidder does not provide clarifications of its Bid by the date and time set in the Employer's request for clarification pursuant to ITB 24.1. (h) a Bidder changes the prices or substance of the bid while providing information pursuant to ITB 24.1.
	3.4 A bidder declared blacklisted and ineligible by the GoN, Public Procurement Monitoring Office (PPMO), by a competent authority under the prevailing law for failure to repay a loan disbursed by a bank or financial institution, and/or the DP in case of DP funded project, shall be ineligible to bid for a contract during the period of time determined by the GoN, PPMO, the competent authority and/or the DP. 3.5 In case of a natural person or firm/institution/company which is already declared blacklisted and ineligible by the GoN, any other new or existing firm/institution/company owned partially or fully by such Natural person or Owner or Board of director of blacklisted firm/institution/company; shall not be eligible bidder.
	3.6 Furthermore, Bidders shall be aware of the provisions of GCC 28.3 and GCC 72.3(j).
4. Eligible Bidders	4.1 A Bidder may be a natural person, private entity, or government - owned entity—subject to ITB 4.5—or any combination of them in the form of a Joint Venture (JV) under an existing agreement, or with the intent to constitute a legally-enforceable joint venture. In the case of a JV: (a) all partners shall be jointly and severally liable for the execution of the Contract in accordance with the Contract terms. Maximum number of JV shall be as specified **in the BDS**. The eligibility criteria requirement of the parties to the JV shall be as specified in Section III Evaluation and Eligibility Criteria, and (b) the JV shall nominate a Representative who shall have the authority to conduct all business for and on behalf of any and all the parties of the JV during the bidding process and, in the event the JV is awarded the Contract, during Contract execution.
	4.2 A Bidder, and all parties constituting the Bidder, shall have the nationality of any country or eligible countries mentioned **in the BDS**. A Bidder shall be deemed to have the nationality of a country if the Bidder is a citizen or is constituted, or incorporated, and operates in conformity with the provisions of the laws of that country. This criterion shall also apply to the determination of the nationality of proposed sub-Contractors or suppliers for any part of the Contract including related services.
	4.3 A Bidder shall not have a conflict of interest. A Bidder found to have a conflict of interest shall be disqualified. if any of, including but not limited to, the following apply: (a) they have controlling partners in common; or (b) they receive or have received any direct or indirect subsidy from any of them; or (c) they have the same legal representative for purposes of this bid; or

	(d) they have a relationship with each other, directly or through common third parties, that puts them in a position to have access to information about or improperly influence on the Bid of another Bidder, or influence the decisions of the Employer regarding this bidding process; or (e) a Bidder participates in more than one bid in this bidding process either individually or as a partner in a joint venture. This will result in the disqualification of all Bids in which it is involved. However, subject to any finding of a conflict of interest in terms of ITB 4.3 (a)-(d) above, this does not limit the participation of the same subcontractor in more than one bid; or (f) a Bidder or any of its affiliated entity, participated as a consultant in the preparation of the design or technical specifications of the works that are the subject of the Bid; or (g) a Bidder was affiliated with a firm or entity that has been hired (or is proposed to be hired) by the Employer as Engineer for the Contract. or (h) a Bidder that has a close business or family relationship with a professional staff of the Procuring Entity.
	4.4 A firm that is under a declaration of ineligibility by the GoN/DP in accordance with ITB 3, at the date of the deadline for bid submission or thereafter, shall be disqualified. A firm shall not be eligible to participate in any procurement activities under an DP-financed, -administered, or -supported project while under temporary suspension or debarment by DP pursuant to the DP's Anticorruption Policy (see ITB 3), whether such debarment was directly imposed by the DP, or enforced by other DPs pursuant to the Agreement for Mutual Enforcement of Debarment Decisions. A bid from a temporary suspended or debarred firm will be rejected.
	4.5 Enterprises owned by Government shall be eligible only if they can establish that they are legally and financially autonomous and operate under commercial law, and that they are not a dependent agency of the GoN.
	4.6 Bidders shall provide such evidence of their continued eligibility satisfactory to the Employer, as the Employer shall reasonably request.
	4.7 Firms shall be excluded in any of the cases, if (a) by an act of compliance with a decision of the United Nations Security Council taken under Chapter VII of the Charter of the United Nations, Nepal prohibits any import of goods or Contracting of works or services from that country or any payments to persons or entities in that country. (b) DP Funded: as a matter of law or official regulation, Nepal prohibits commercial relations with that country, provided that the DP is satisfied that such exclusion does not preclude effective competition for the supply of goods or related services required; (c) DP Funded: a firm has been determined to be ineligible by the DP in relation to their guidelines or appropriate provisions on preventing and combating fraud and corruption in projects financed by them.
	4.8 The Bidder, including all parties constituting the Bidder, shall be ineligible to participate in the open competitive bidding process if it has already secured maximum number of construction contracts (in open competitive bidding) **as specified in BDS** and has not yet completed the work as stipulated in the respective contracts. 4.9 For the purpose of ITB 4.8 above, the bidder shall declare that the bidder, and all parties constituting the Bidder have not already secured maximum number of construction contracts (in open competitive bidding in procurement of works) **as specified in BDS**. If the bidder, and all parties constituting the Bidder has participated in bidding processes of many public entities and during that period the maximum number of contracts have been attained as specified saturates due to issuance of letters of acceptance by a particular public entity, the bidder shall inform in writing to all other concerned public entities, where the bidder have participated in bidding process, within three days of issuance of last letter of acceptance that saturates the maximum

	number of contracts as specified.
5. Eligible Materials, Equipment and Services	5.1 The materials, equipment and services to be supplied under the Contract shall have their origin in any source countries as defined in **the BDS** and all expenditures under the Contract will be limited to such materials, equipment, and services. At the Employer's request, Bidders may be required to provide evidence of the origin of materials, equipment and services.
	5.2 For purposes of ITB 5.1 above, "origin" means the place where the materials and equipment are mined, grown, produced or manufactured, and from which the services are provided. Materials and equipment are produced when, through manufacturing, processing, or substantial or major assembling of components, a commercially recognized product results that differs substantially in its basic characteristics or in purpose or utility from its components.
B. Contents of Bidding Documents	
6. Sections of Bidding Document	6.1 The Bidding Document consist of Parts I, II, and III, which include all the Sections indicated below, and should be read in conjunction with any Addenda issued in accordance with ITB 8. PART I Bidding Procedures Section I Instructions to Bidders (ITB) Section II Bid Data Sheet (BDS) Section III Evaluation and Eligibility Criteria (EEC) Section IV Bidding Forms (BDF) PART II Requirements Section V Works Requirements (WRQ) Section VI Bill of Quantities (BOQ) PART III Conditions of Contract and Contract Forms Section VII General Conditions of Contract (GCC) Section VIII Special Conditions of Contract (SCC) Section IX Contract Forms (COF)
	6.2 The Invitation for Bids (IFB) issued by the Employer is not part of the Bidding Document.
	6.3 The Employer is not responsible for the completeness of the Bidding Document and their Addenda, if they were not obtained directly from the source stated by the Employer in the Invitation for Bids.
	6.4 The Bidder is expected to examine all instructions, forms, terms, and specifications in the Bidding Document and to furnish with its bid all information and documentation as is required by the Bidding Documents. Failure to furnish all information or documentation required by the Bidding Document may result in the rejection of the bid.
7. Clarification of Bidding Document, Site Visit, Pre-Bid Meeting	7.1 A prospective Bidder requiring any clarification of the Bidding Document shall contact the Employer in writing at the Employer's address indicated **in the BDS** or raise any question or curiosity during the pre-bid meeting if provided for in accordance with ITB 7.4. The Employer will respond in writing to any request for clarification, provided that such request is received within the period as mentioned in ITB 7.5. The Employer shall forward copies of its response to all Bidders who have acquired the Bidding Document in accordance with ITB 6.3, including description of the inquiry but without identifying its source. Should the Employer deem it necessary to amend the Bidding Document as a result of a request for clarification, it shall do so following the procedure under ITB 8 and ITB 17.2
	7.2 The Bidder is advised to visit and examine the Site of Works and its surroundings and obtain for itself, on its own risk and responsibility, all information that may be necessary for preparing the bid and entering into a Contract for construction of the Works. The costs of visiting the Site shall be at the Bidder's own expense.

	7.3 The Bidder and any of its personnel or agents will be granted permission by the Employer to enter upon its premises and lands for the purpose of such visit, but only upon the express condition that the Bidder, its personnel, and agents will release and indemnify the Employer and its personnel and agents from and against all liability in respect thereof, and will be responsible for death or personal injury, loss of or damage to property, and any other loss, damage, costs, and expenses incurred as a result of the inspection.
	7.4 The Bidder's designated representative is invited to attend a pre-bid meeting, if provided for **in the BDS.** The purpose of the meeting will be to clarify issues and to answer questions on any matter that may be raised at that stage. 7.5 The Bidder is requested, as far as possible, to submit any questions in writing, to reach the Employer as mentioned **in BDS**.
	7.5 The Bidder is requested, to submit any questions in writing, to reach the Employer as mentioned **in BDS**.
	7.6 Minutes of the pre-bid meeting, including the text of the questions raised, without identifying the source, and the responses given, together with any responses prepared after the meeting, will be transmitted promptly to all Bidders who have acquired the Bidding Document in accordance with ITB 6.3. Any modification to the Bidding Document that may become necessary as a result of the pre-bid meeting shall be made by the Employer exclusively through the issue of an addendum pursuant to ITB 8 and not through the minutes of the pre-bid meeting.
	7.7 Nonattendance at the pre-bid meeting will not be a cause for disqualification of a Bidder.
8. Amendment of Bidding Document	8.1 At any time prior to the deadline for submission of bids, the Employer may amend the Bidding Document by issuing addendum or several addenda.
	8.2 Any addendum issued shall be part of the Bidding Document and shall be communicated in writing to all who have obtained the Bidding Document from the Employer in accordance with ITB 6.3.
	8.3 To give prospective Bidders reasonable time in which to take an addendum into account in preparing their bids, the Employer may, at its discretion, extend the deadline for the submission of bids, pursuant to ITB 19.2. However, the time available to submit bids shall not be less than five (5) days since amendment in bidding document.
C. Preparation of Bids	
9. Cost of Bidding	9.1 The Bidder shall bear all costs associated with the preparation and submission of its Bid, and the Employer shall in no case be responsible or liable for those costs, regardless of the conduct or outcome of the bidding process.
10. Language of Bid	10.1 The Bid, as well as all correspondence and documents relating to the bid exchanged by the Bidder and the Employer, shall be written in the language specified **in the BDS**. Supporting documents and printed literature that are part of the Bid may be in another language provided they are accompanied by an accurate translation of the relevant passages in the language specified **in the BDS**, in which case, for purposes of interpretation of the Bid, such translation shall govern.
11. Documents Comprising the Bid	11.1 The Bid shall comprise the following: (a) Letter of Bid; (b) completed Bill of Quantities (BoQ), in accordance with ITB 12 and ITB 13, or as stipulated **in the BDS**; (c) Bid Security, in accordance with ITB 16; (d) written confirmation authorizing the signatory of the Bid to commit the Bidder, in accordance with ITB 17.2; (e) documentary evidence of establishing the Bidder's eligibility; (f) Bids submitted by a Joint Venture shall include a copy of the Joint Venture Agreement entered into by all partners. Alternatively, a Letter of Intent to execute a Joint Venture Agreement in the event of a successful Bid shall be signed by all partners and submitted with the Bid, together with a copy of the proposed agreement. The Joint Venture

	agreement, or letter of intent to enter into a Joint Venture including a draft agreement shall indicate at least the parts of the Works to be executed by the respective partners; (g) Table of Price Adjustment (if applicable); and (h) any other required documents required, in the **BDS**.
	11.2 The Bidder is solely responsible for the authenticity of the submitted documents.
12. Letter of Bid and Schedules	12.1 The Letter of Bid, Schedules, and all documents listed under ITB 11, shall be prepared using the relevant forms in Section IV (Bidding Forms) and in Section VI (Bill of Quantities).The forms must be completed without any alterations to the text, and no substitutes shall be accepted. All blank spaces shall be filled in with the information requested.
13. Bid Prices and Discounts	13.1 The prices and discounts quoted by the Bidder in the Letter of Bid and in the Schedules shall conform to the requirements specified below.
	13.2 The Bidder shall submit a bid for the whole of the works described in ITB 1.1 by filling in prices for all items of the Works, as identified in Section VI (Bill of Quantities). In case of Unit Rate Contracts, the Bidder shall fill in rates and prices for all items of the Works described in the Bill of Quantities. Items against which no rate or price is entered by the Bidder will not be paid for by the Employer when executed and shall be deemed covered by the rates for other items and prices in the Bill of Quantities.
	13.3 The price to be quoted in the Letter of Bid shall be the total price of the Bid, excluding any discounts offered. Absence of the total price in the Letter of Bid may result in rejection of the Bid.
	13.4 The Bidder shall quote any discounts and the methodology for their application in the Letter of Bid, in accordance with ITB 12.1.
	13.5 If so indicated in ITB 1.1 and ITB 29.4, bids are invited for individual Contracts or for any combination of Contracts (packages). Bidders wishing to offer any price reduction for the award of more than one Contract shall specify in their bid the price reductions applicable to each package, or alternatively, to individual Contracts within the package. Price reductions or discounts shall be submitted in accordance with ITB 13.4, provided the bids for all Contracts are submitted and opened at the same time.
	13.6 Unless otherwise provided **in the BDS** and the Conditions of Contract, the prices quoted by the Bidder shall be fixed. If the prices quoted by the Bidder are subject to adjustment during the performance of the Contract in accordance with the provisions of the Conditions of Contract, the Bidder shall furnish the indices and weightings for the price adjustment formulae in the Table of Adjustment Data in Section IV (Bidding Forms) and the Employer may require the Bidder to justify its proposed indices and weightings.
	13.7All duties, taxes, and other levies payable by the Contractor under the Contract, or for any other cause, as of the date 30 days prior to the deadline for submission of bids, shall be included in the rates and prices and the total bid price submitted by the Bidder.
14. Currency of Bid and Payment	14.1 The currency of the bid and payment shall be in Nepalese Rupees.
15. Period of Validity of Bids	15.1 Bids shall remain valid for the period specified **in the BDS.** The bid validity period shall start from the bid submission deadline as prescribed by the Employer in accordance with ITB 19.1. If the prescribed bid submission deadline date falls on a government holiday, then the next working day shall be considered as the bid submission deadline date. In such case the validity period of the bids shall be considered from the original bid submission deadline date. In the case of electronic bid submission, if any technical issue arises in the handling of the e-GP system, the PPMO may extend the deadline for bid submission. However, the validity period of the bids shall still be counted from the original bid submission deadline. A bid valid for a shorter period shall be rejected by the Employer as nonresponsive.
	15.2 In exceptional circumstances, prior to the expiration of the bid validity period, the Employer may request Bidders to extend the period of validity of their Bids. The request and the responses shall

	be made in writing. If a bid security is requested in accordance with ITB 16, it shall also be extended 30 days beyond the deadline of the extended validity period. A Bidder may refuse the request without forfeiting its bid security. A Bidder granting the request shall not be required or permitted to modify its bid and to include any additional conditions against the provisions specified in Bid Documents.
16. Bid Security	16.1 The Bidder shall furnish as part of its bid, in original form, a bid security as specified **in the BDS.** In case of e-submission of bid, the Bidder shall upload scanned copy of Bid security letter at the time of electronic submission of the bid. The Bidder accepts that the scanned copy of the Bid security shall, for all purposes, be equal to the original. The details of original Bid Security and the scanned copy submitted with e-bid should be the same otherwise the bid shall be non-responsive.
	16.2 The bid security shall be, at the Bidder's option, in any of the following forms: (a) an unconditional bank guarantee from Commercial Bank or Financial Institution eligible to issue Bank Guarantee as per prevailing Law or; (b) a cash deposit voucher in the Employer's Account as specified **in BDS**. In the case of a bank guarantee, the bid security shall be submitted either using the Bid Security Form included in Section IV (Bidding Forms) or in another Form acceptable to the employer. The form must include the complete name of the Bidder. The bid security shall be valid for minimum thirty (30) days beyond the original validity period of the bid, or beyond any period of extension if requested under ITB 15.2. A bid security valid for a shorter period shall be rejected by the Employer as nonresponsive.
	16.3 Any bid not accompanied by an enforceable and substantially compliant bid security shall be rejected by the Employer as nonresponsive. In case of e- Submission, if the scanned copy of an acceptable Bid Security letter is not uploaded with the electronic Bid, then Bid shall be rejected.
	16.4 The public entity shall return the bid securities except those that are to be forfeited as per ITB 16.5 to the respective bidders within three (3) days after the successful bidder has furnished the required performance security and signed the Contract Agreement pursuant, to ITB 34.1 and ITB 35.1.
	16.5 The bid security shall be forfeited if: (a) a Bidder requests for withdrawal or modification of its bid, except as provided in ITB 15.2: (i) during the period of bid validity specified by the Bidder on the Bid, in case of electronic submission; (ii) from the period twenty-four hours prior to bid submission deadline up to the period of bid validity specified by the Bidder on the Letter of Bid, in case of hard copy submission. (b) a Bidder changes the prices or substance of the bid while providing information pursuant to ITB 24.1; (c) a Bidder involves in fraud and corruption pursuant to ITB 3.1; (d) the successful Bidder fails to: (i) furnish a performance security in accordance with ITB 29.5, ITB 29.8 and ITB 34.1; or (ii) sign the Contract in accordance with ITB 35.1 or (iii) accept the correction of arithmetical errors pursuant to ITB 28.1; (e) if the bidder fails to inform about the saturation of the maximum number of contracts as per ITB 4.9.
	16.6 The Bid Security of a JV shall be in the name of the JV that submits the bid. If the JV has not been legally constituted at the time of bidding, the Bid Security shall be in the names of all future partners as named in the letter of intent mentioned in ITB 4.1.
17. Format and Signing of	17.1 The Bidder shall prepare one original of the documents comprising the bid as described in ITB 11 and clearly mark it ORIGINAL". In addition, the Bidder shall submit copies of the bid in the number specified **in the BDS**, and clearly mark each of them "COPY." In the event

Bid	of any discrepancy between the original and the copies, the original shall prevail. In case of e-submission of bid, the Bidder shall submit his bid electronically in PDF or web forms files as specified in ITB Clause 18.1(b),
	17.2 The original and all copies of the bid shall be typed or written in indelible ink and shall be signed by a person duly authorized to sign on behalf of the Bidder. This authorization shall consist of a written confirmation as specified **in the BDS** and shall be attached to the bid. The name and position held by each person signing the authorization must be typed or printed below the signature. All pages of the bid, except for un amended printed literature, shall be signed or initialed by the person signing the bid.
	17.3 Any amendments such as interlineations, erasures, or overwriting shall be valid only if they are signed or initialed by the person signing the bid.
D. Submission and Opening of Bids	
18. Sealing and Marking of Bids	18.1 Unless otherwise specified **in BDS**, Bidders shall submit their bids by electronic or by mail/by hand/by courier. Procedures for submission, sealing and marking are as follows: (a) Bidders submitting bids by mail, by hand or by courier i. Bidders shall enclose the original and each copy of the Bid. These envelopes containing the original and the copies shall then be enclosed in one single envelope. ii. The inner and outer envelopes shall: (aa) bear the name and address of the Bidder; (bb) be addressed to the Employer as provided **in BDS**19.1; (cc)bear the specific identification of this bidding process indicated **in BDS** 1.1; and (dd) bear a warning not to open before the time and date for bid opening. iii. If all envelopes are not sealed and marked as required, the Employer will assume no responsibility for the misplacement or premature opening of the bid. (b) Bidders submitting Bids electronically shall follow the electronic bid submission procedure specified **in BDS**.
19. Deadline for Submission of Bids	19.1 Bids must be received by the Employer at the address and no later than the date and time indicated **in the BDS**. In case of e-submission, the standard time for e-submission is Nepalese Standard Time as set out in the server. The e-procurement system will accept the e-submission of bid from the date of publishing of notice and will automatically not allow the e-submission of bid after the deadline for submission of bid.
	19.2 The Employer may, at its discretion, extend the deadline for the submission of bids by amending the Bidding Document in accordance with ITB 8, in which case all rights and obligations of the Employer and Bidders previously subject to the deadline shall thereafter be subject to the deadline as extended.
20. Late Bids	20.1 The Employer shall not consider any bid that arrives after the deadline for submission of bids, in accordance with ITB 19. Any bid received by the Employer after the deadline for submission of bids shall be declared late, rejected, and returned unopened to the Bidder.
21. Withdrawal, and Modification of Bids	21.1 A Bidder may withdraw, or modify its bid after it has been submitted either in hard copy or by e-submission. Procedures for withdrawal or modification of submitted bids are as follows: (i) Bids submitted in hard Copy a) Bidders may withdraw or modify its bids by sending a written notice in a sealed envelope, duly signed by an authorized representative, and shall include a copy of the authorization in accordance with ITB 17.2 before 24 hours prior to the last deadline of submission of bid. The corresponding modification of the bid must accompany the respective written notice. All notices must be: (aa) prepared and submitted in accordance with ITB 17 and ITB 18, and in addition,

	the respective envelopes shall be clearly marked "WITHDRAWAL", "MODIFICATION;" and (bb) received by the Employer twenty-four hour prior to the deadline prescribed for submission of bids, in accordance with ITB 19. ii) E-submitted bids. a) Bidder may submit modification or withdrawal prior to the deadline prescribed for submission of bids through e-GP system by using the forms and instructions provided by the system.
	21.2. Bids requested to be withdrawn in accordance with ITB 21.1 shall not be opened. In case of hard copy submission, the Bid will be returned unopened to the Bidders.
	21.3 Except in case of any modification or correction in bid document made by procuring entity, Bidder may submit request for withdrawal or modification only one time. 21.4 In case of hard copy bid, no bid may be withdrawn if the bid has already been modified; except in case of any modification or correction in bid document by procuring entity.
	21.5 Request for withdrawal or modification must be made through the same medium of submission. Request for withdrawal or modifications through different medium shall not be considered.
	21.6 The following provisions apply for withdrawal or modification of the Bids: (i) In case of bids submitted in hard copy no bid shall be withdrawn or modified in the interval between 24 hours prior to the deadline for submission of bids and the expiration of the period of bid validity specified by the Bidder on the Letter of Bid or any extension thereof. (ii) In case of e-submitted bids no bids shall be withdrawn or modified in the interval between deadline for submission of bids and the expiration of the period of bid validity specified by the Bidder on the Letter of Bid or any extension thereof.
	21.7 Once a Bid is withdrawn, bidder will not be able to submit another bid for the same bid.
22. Bid Opening	22.1 The Employer shall open the bids in public at the address, date and time specified **in the BDS** in the presence of Bidders` designated representatives who choose to attend.
	The Employer shall download the e-submitted bid files. The e-GP system allows the Employer to download the e-submitted bid files (report) only after bid opening date and time after login simultaneously by two members of the Bid opening committee.
	22.3 Electronically submitted bid shall be opened at first in the same time and date as specified above. Electronic Bids shall be opened one by one and read out. The e-submitted bids must be readable through open standards interfaces. Unreadable and or partially submitted bid files shall be considered incomplete.
	22.4 Thereafter, envelopes marked "WITHDRAWAL" shall be opened and read out and the envelope with the corresponding bid shall not be opened, but returned to the Bidder. No bid withdrawal shall be Permitted unless the corresponding withdrawal notice contains a valid authorization to request the withdrawal and is read out at bid opening. Next, envelopes marked "MODIFICATION" shall be opened and read out with the corresponding bid. No bid modification shall be permitted unless the corresponding modification notice contains a valid authorization to request the modification and is read out at bid opening. Only envelopes that are opened and read out at bid opening shall be considered further.
	22.5 All other envelopes shall be opened one at a time, reading out: the name of the Bidder; the Bid Price(s), including any discounts and alternative bids and indicating whether there is a modification; the presence of a bid security and any other details as the Employer may consider appropriate. Only discounts and alternative offers read out at bid opening shall be

	considered for evaluation. No bid shall be rejected at bid opening except for late bids, in accordance with ITB 20.1.
	22.6 The Employer shall prepare a record of the bid opening that shall include, as a minimum: the name of the Bidder and whether there is a withdrawal, or modification; the Bid Price, per Contract if applicable, including any discounts and alternative offers; and the presence or absence of a bid security. The Bidders' representatives who are present shall be requested to sign the record. The omission of a Bidder's signature on the record shall not invalidate the contents and effect of the record.
E. Evaluation and Comparison of Bids	
23. Confidentiality	23.1 Information relating to the examination, evaluation, comparison, and recommendation of Contract award, shall not be disclosed to Bidders or any other persons not officially concerned with such process until information on Contract award is communicated to all Bidders.
	23.2 Any attempt by a Bidder to influence the Employer in the evaluation of the bids or Contract award decisions may result in the rejection of its bid.
	23.3 Notwithstanding ITB 23.2, from the time of bid opening to the time of Contract award, if any Bidder wishes to contact the Employer on any matter related to the bidding process, it may do so in writing.
24. Clarification of Bids	24.1 To assist in the examination, evaluation, and comparison of the bids, the Employer may, at its discretion, ask any Bidder for a clarification of its bid. Any clarification submitted by a Bidder that is not in response to a request by the Employer shall not be considered. The Employer's request for clarification and the response shall be in writing. No change in the prices or substance of the bid shall be sought, offered, or permitted, except to confirm the correction of arithmetic errors discovered by the Employer in the evaluation of the bids, in accordance with ITB 28. In case of e-submission of bid, upon notification from the employer, the bidder shall also submit the original of documents comprising the bid as per ITB 11.1 for verification of submitted documents for acceptance of the e-submitted bid.
	24.2 If a Bidder does not provide clarifications of its bid by the date and time set in the Employer's request for clarification, its bid shall be rejected.
25. Deviations, Reservations, and Omissions	25.1 During the evaluation of bids, the following definitions apply: (a) "Deviation" is a departure from the requirements specified in the Bidding Document; (b) "Reservation" is the setting of limiting conditions or withholding from complete acceptance of the requirements specified in the Bidding Document; and (c) "Omission" is the failure to submit part or all of the information or documentation required in the Bidding Document.
26. Determination of Responsiveness	26.1 The Employer's determination of a bid's responsiveness is to be based on the contents of the bid itself, as defined in ITB 11.
	26.2 A substantially responsive bid is one that meets the requirements of the Bidding Document without material deviation, reservation, or omission. A material deviation, reservation, or omission is one that, (a) if accepted, would: (i) affect in any substantial way the scope, quality, or performance of the Works specified in the Contract; or (ii) limit in any substantial way, inconsistent with the Bidding Document, the Employer's rights or the Bidder's obligations under the proposed Contract; or (b) if rectified, would unfairly affect the competitive position of other Bidders presenting substantially responsive bids.
	26.3 If a bid is not substantially responsive to the requirements of the Bidding Document, it shall be rejected by the Employer and may not subsequently be made responsive by correction of the

	material deviation, reservation, or omission.
	26.4 In case of e-submission bids, the Employer evaluates the bid on the basis of the information in the electronically submitted bid files. If the Bidder cannot substantiate or provide evidence to establish the information provided in e-submitted bid through documents/ clarifications as per ITB Clause 24.1, the bid shall not be considered for further evaluation.
27. Nonconformities, Errors, and Omissions	27.1 Provided that a bid is substantially responsive, the Employer may waive any non-conformities in the bid that do not constitute a material deviation, reservation, or omission.
	27.2 Provided that a bid is substantially responsive, the Employer may request that the Bidder submit the necessary information or documentation, within a reasonable period of time, to rectify nonmaterial nonconformities in the bid related to documentation requirements. Requesting information or documentation on such nonconformities shall not be related to any aspect of the price of the bid. Failure of the Bidder to comply with the request may result in the rejection of its bid.
	27.3 Provided that a bid is substantially responsive, the Employer shall rectify quantifiable nonmaterial nonconformities related to the Bid Price. To this effect, the Bid Price shall be adjusted, for comparison purposes only, to reflect the price of a missing or non-conforming item or component. The adjustment shall be made using the methods indicated in Section III (Evaluation and Eligibility Criteria).
	27.4 If the monetary value of such non-conformities is found to be more than fifteen percent of the Bid Price of the bidder on account of minor discrepancies pursuant to ITB 27.3, such bid shall be considered non responsive and shall not be involved in evaluation.
28. Correction of Arithmetical Errors	28.1 Provided that the bid is substantially responsive, the Employer shall correct arithmetical errors on the following basis: (a) only for unit price Contracts, if there is a discrepancy between the unit price and the total price that is obtained by multiplying the unit price and quantity, the unit price shall prevail and the total price shall be corrected, unless in the opinion of the Employer there is an obvious misplacement of the decimal point in the unit price, in which case the total price as quoted shall govern and the unit price shall be corrected; (b) if there is an error in a total corresponding to the addition or subtraction of subtotals, the subtotals shall prevail and the total shall be corrected; and (c) If there is a discrepancy between the bid price in the Summary of Bill of Quantities and the bid amount in item (c) of the Letter of Bid, the bid price in the Summary of Bill of Quantities will prevail and the bid amount in item (c) of the Letter of Bid will be corrected. (d) if there is a discrepancy between words and figures, the amount in words shall prevail, unless the amount expressed in words is related to an arithmetic error, in which case the amount in figures shall prevail subject to (a) ,(b) and (c) above.
	28.2 If a Bidder does not accept the correction of arithmetical errors, its bid shall be disqualified and its bid security shall be forfeited.
29. Evaluation of Bids	29.1 The Employer shall use the criteria and methodologies listed in this Clause. No other evaluation criteria or methodologies shall be permitted.
	29.2 To evaluate a bid, the Employer shall consider the following: (a) the bid price, excluding Value Added Tax and Provisional Sums in the Summary Bill of Quantities, for Unit Rate Contracts, or Schedule of Prices for lump sum Contracts, but including Day work items, where priced competitively; (b) adjustment for correction of arithmetic errors in accordance with ITB 28.1; (c) adjustment due to discounts offered in accordance with ITB 13.4; (d) adjustment for nonconformities in accordance with ITB 27.3; (e) application of all the evaluation factors indicated in Section III (Evaluation and Eligibility Criteria); If the evaluated Bid Price of the Bidder is more than 30 (thirty) percent below or substantially

	higher than the cost estimate, the Employer shall reject the Bid as non-responsive.
	29.3 The estimated effect of the price adjustment provisions of the Conditions of Contract, applied over the period of execution of the Contract, shall not be taken into account in bid evaluation.
	29.4 If this Bidding Document allows Bidders to quote separate prices for different Lots (Contracts), and to award multiple Contracts to a single Bidder **as specified in BDS**, the methodology to determine the lowest evaluated price of the Contract combinations, including any discounts offered in the Letter of Bid, is specified in Section III (Evaluation and Eligibility Criteria).
	29.5 If the bid for a Unit Rate Contract, evaluated as per ITB 30.1, is front-loaded or has quoted abnormally high rate for any item believing that the item was underestimated, the Employer **shall** require the Bidder to provide clarification along with detailed rate analysis, for any or all items of the Bill of Quantities as per ITB 24.1. The rate analysis submitted shall be analyzed and compared against prevailing norms and rates, on the basis of the work execution methodology, technology, and management methods specified by the bidder. If the clarification is deemed unsatisfactory, the Employer shall require that the amount of the performance security be increased at the expense of the Bidder as **specified in BDS**.
	29.6 In case of e-submission bids, the Employer evaluates the bid on the basis of the information in the electronically submitted bid files. If the Bidder cannot substantiate or provide evidence to establish the information provided in e-submitted bid through documents/ clarifications as per ITB Clause 24.1, the bid shall not be considered for further evaluation.
	29.7 If all the Bids evaluated are substantially higher than the cost estimate, the employer may negotiate with the bidder who submitted the lowest evaluated substantially responsive Bid to propose a lump sum discount rate in order to bring the bid price within the approved cost estimate. However, no change in the substance of the bid is permitted during the negotiations.
	29.8 If no agreement can be reached as per ITB 29.7, the employer shall cancel the procurement proceedings.
30. Comparison of Bids	30.1 The Employer shall compare all substantially responsive bids in accordance with ITB 29.2. The Employer shall determine the Average Bid Price of all the substantially responsive Bids. The Bid Price which is closest to the Average Bid Price AND is not substantially higher than the cost estimate shall be selected for awarding the contract. In case two or more Bid Prices are determined to be equally closest to the Average Bid Price, the Bid Price which is below the Average Bid Price shall be selected for awarding the contract.
	30.2 While evaluating the Bid Price as per ITB 30.1, if the Bid Price of two or more Bidders is found to be equal, the Employer shall select the bid for awarding the contract by drawing of lots in presence of Bidders' designated representatives who choose to attend in date, time and place as notified by the Employer in writing to the concerned bidders. The Bidders' representatives who are present shall be requested to sign a record evidencing their attendance. The omission of a Bidder's signature on the record or the absence of a Bidder during the drawing of lots shall not invalidate the contents and the effect of the record. The method of drawing of lots shall be determined by the Employer.
31. Employer's Right to Accept Any Bid, and to Reject Any or All Bids	31.1 The Employer reserves the right to accept or reject any bid, and to annul the bidding process and reject all bids at any time prior to Contract award, without thereby incurring any liability to Bidders. In case of annulment, all bids submitted and specifically, bid securities, shall be promptly returned to the Bidders.
	31.2 The public entity shall give notice of the rejection of bids or the cancellation of the procurement proceedings pursuant to ITB 31.1, along with the reasons for such rejection or cancellation, to all bidders participating in the bid.
	31.3 Where any bidder requests, within thirty (30) days of the communication of the notice pursuant to ITB 31.2, the grounds for the rejection of all bids or the cancellation of the procurement proceedings, the public entity shall provide such information to that bidder.

F. Award of Contract	
32. Award Criteria	32.1 The Employer shall award the Contract to the Bidder whose Bid Price is selected as per ITB 29.7, ITB 30.1 or ITB 30.2 and is substantially responsive to the Bidding Document, provided further that the Bidder is determined to be qualified to perform the Contract satisfactorily.
33. Letter of Intent to Award the Contract/ Notification of Award	33.1 The Employer shall notify the concerned Bidder whose bid has been selected in accordance with ITB 32.1 within seven days of the selection of the bid, in writing that the Employer has intention to accept its bid and the information regarding the name, address and amount of selected bidder shall be given to all other bidders who submitted the bid.
	33.2 After issuance of the notice under ITB 33.1 if the concerned bidder provides information pursuant to ITB 4.9 regarding saturation of maximum number of contracts, the employer shall disqualify the bidder and shall select the next Bidder whose Bid Price is closest to the previously determined Average Bid Price in accordance with ITB 32.1 and notify accordingly as per ITB 33.1.
	33.3 If no bidder submits an application pursuant to ITB 36 within a period of seven days of the notice provided under ITB 33.1, the Employer shall, accept the bid selected in accordance with ITB 32.1 and Letter of Acceptance shall be communicated to the selected bidder prior to the expiration of period of Bid validity, to furnish the performance security and sign the contract within fifteen days.
	33.4 After communicating letter of acceptance under ITB 33.3, if the concerned bidder provides information pursuant to ITB 4.9 regarding saturation of maximum number of contracts, the employer shall reject the bid of that bidder and shall select the next Bidder whose Bid Price is closest to the previously determined Average Bid Price in accordance with ITB 32.1 and shall issue the notice accordingly as per ITB 33.1. In such case bid security of the rejected bidder shall not be forfeited.
34. Performance Security	34.1 Within Fifteen (15) days of the receipt of Letter of Acceptance from the Employer, the successful Bidder shall furnish the performance security in an amount equal to 5 (five) percent of the Bid Price from Commercial Bank or Financial Institution eligible to issue Bank Guarantee as per prevailing Law in Nepal in accordance with the conditions of Contract using Sample Form for the Performance Security included in Section IX (Contract Forms), or another form acceptable to the Employer. The Bid Price shall be without VAT but including Provisional Sum.
	34.2 Failure of the successful Bidder to submit the above-mentioned Performance Security or to sign the Contract Agreement shall constitute sufficient grounds for the annulment of the award and forfeiture of the bid security. In that event the Employer may award the Contract to the next Bidder whose Bid Price is closest to the previously determined Average Bid Price in accordance with ITB 32.1 whose offer is substantially responsive and is determined by the Employer to be qualified to perform the Contract satisfactorily. The process shall be repeated according to ITB 33.
35. Signing of Contract	35.1 The Employer and the successful Bidder shall sign the Contract Agreement within the period as stated ITB 34.1.
	35.2 At the same time, the Employer shall affix a public notice on the result of the award on its notice board and make arrangement for causing such notice to be affixed on the notice board also of the **District Coordination Committee, District Administration Office, Provincial Treasury and Controller Office and District Treasury and Controller Office**. The Employer may make arrangements to post the notice into its website, if it has; and if it does not have, into the website of the Public Procurement Monitoring Office, identifying the bid and lot numbers and the following information: (i) the result of evaluation of bid; (ii) date of publication of notice inviting bids; (iii) name of newspaper; (iv) reference number of notice; (v) item of procurement; (vi) name and address of bidder making contract and (vii) contract price.

	35.3 Within thirty (30) days from the date of issuance of notification pursuant to ITB 33.1 unsuccessful bidders may request in writing to the Employer for a debriefing seeking explanations on the grounds on which their bids were not selected. The Employer shall promptly respond in writing to any unsuccessful Bidder who, requests for debriefing.
	35.4 If the bidder whose bid is accepted fails to sign the contract as stated ITB 35.1, the Public Procurement Monitoring Office shall blacklist the bidder on recommendation of the Public Entity.
36. Complaint and Review	36.1 If a Bidder is dissatisfied with the Procurement proceedings or the decision made by the Employer in the intention to award the Contract, it may file an application to the Chief of the Public Entity within Seven (7) days of providing the notice under ITB 33.1 by the Public Entity, for review of the proceedings stating the factual and legal grounds.
	36.2 Late application filed after the deadline pursuant to ITB 36.1 shall not be processed.
	36.3 The chief of Public Entity shall, within five (5) days after receiving the application, give its decision with reasons, in writing pursuant to ITB 36.1: (a) whether to suspend the procurement proceeding and indicate the procedure to be adopted for further proceedings; or (b) to reject the application. The decision of the chief of Public Entity shall be final.

SECTION - II

Bid Data Sheet

This section consists of provisions that are specific to each procurement and supplement the information or requirements included in Section I. Instructions to Bidders.

	A. General
ITB 1.1	The number of the Invitation for Bids is: NCB/SRM/WORKS-04/083/084
ITB 1.1	The Employer is: Sisne Rural Municipality Office, Rukumkot, Rukum East
ITB 1.1	**Multiple Contract or lots (contracts) is *not applicable***
ITB 2.1	The name of the Project is: Chokbazar Pakhagaun Hundai Serakhet Dhal Nikasa Yojana Sisne-5 &6, Rukum East. The implementing agency is: **NA**
ITB 4.1 (a)	Maximum number of partners in a joint venture shall be: ***3 (three)***
ITB 4.2	For GoN funded: Eligible countries: ***Nepal***
ITB 4.4	For GoN: ***www.sisnemun.gov.np***
ITB 4.8 & ITB 4.9	For GoN Funded: The Bidder, including all parties constituting the Bidder, shall be ineligible to participate in the open competitive bidding process if it has already secured **five (5)** construction contracts (in open competitive bidding) and has not yet completed the work as stipulated in the respective contracts. Following Procurement of Works contracts shall not be counted for this purpose: a) The works for which tender were invited or contracts accepted before 2078-12-03 B.S (March 17, 2022 A.D) b) The works for which tender have been invited and contracts accepted after 2078-12-03 B.S (March 17, 2022 A.D) but the work acceptance report has been approved according to Rule 117 of PPR. c) The works for which tenders were invited or contracts accepted under all types of foreign assistance.
ITB 5.1	For GoN funded: For the purpose of Country of Origin: "all Countries"
	B. Bidding Document
ITB 7.1	For clarification purposes only, the Employer's address is: Attention: Karan Khadka Address: Sisne Rural Municipality Office, Rukum East Lumbini Province Telephone: 088-413064 Facsimile number: 9858036333 Electronic mail address: sisnermun@gmail.com
ITB 7.4	A Pre-Bid meeting **"shall be"** held. Pre-Bid Meeting will Take place at the following date, time and place: Date: 2083-07-10 Time: 11:00 AM Place: Sisne Rural Municipality Office, Rukum East A site visit ***"shall not be***" organized by the Employer.
ITB 7.5	Time for request: Requests for clarification should be received by the Employer no later than 10 days prior to the deadline for submission of bids.
	C. Preparation of Bids
ITB 10.1	The language of the bid is: English / Nepali
ITB 11.1 (b)	In accordance with ITB 12 and ITB 14, the following schedules shall be submitted with the bid, including the priced Bill of Quantities for Unit Rate Contracts and Schedule of Prices for lump sum contracts: _____
ITB 11.1 (h)	The Bidder shall submit with its bid the following additional documents: NA.
ITB 13.6	The prices quoted by the Bidder ***"shall not be"*** subject to adjustment during the performance of the Contract.

ITB 15.1	The bid validity period shall be: ***Ninety (90) days***.
ITB 16.1	The Bidder shall furnish a bid security, from Commercial Bank or Financial Institution eligible to issue Bank Guarantee as per prevailing Law in Nepal with a minimum of **NRs *280,000.00***, which shall be valid for 30 days beyond the validity period of the bid.
ITB 16.2 (b)	Account Name: SISNE GA PA DHARAUTI KHATA Bank Name: Nepal Bank Ltd. Bank Address: Rukumkot, Rukum East Account Number: 18903000003000000001
ITB 17.1	In addition to the original of the bid, the number of copy/ies is/are: ***Not Applicable***
ITB 17.2	The written confirmation of authorization to sign on behalf of the Bidder shall indicate: (a) The name and description of the documentation required to demonstrate the authority of the signatory to sign the Bid such as a Power of Attorney; and (b) In the case of Bids submitted by an existing or intended JV, an undertaking signed by all parties (i) stating that all parties shall be jointly and severally liable, and (ii) nominating a Representative who shall have the authority to conduct all business for and on behalf of any and all the parties of the JV during the bidding process and, in the event the JV is awarded the Contract, during contract execution.
D. Submission and Opening of Bids	
ITB 18.1	Bidders shall have the option of submitting their bids ***by hand / by courier.***
ITB 18.1 (b)	**Electronic bid submission procedure:** (a) Bidders submitting Bids electronically shall follow the electronic bid submission procedures specified in this clause. i. Bidders who choose to submit their bids electronically, can view/download the bidding documents from ***"published bids"*** section of e-GP system, https://bolpatra.gov.np/egp. ii. For the purpose of e-Submission, the bidder shall, at first, register in e-GP system and maintain their organization profile data and documents required during bid response preparation. The details of e-GP registration and profile management procedure are specified in Article No 9 and 10 respectively of e-GP Directives issued by PPMO, which can be downloaded from ***Download section*** of e-GP system. iii. The bidders shall prepare their bids using data and documents maintained in bidder's profile, instruction provided by e-GP system and forms/format provided in the bidding document. iv. Bidders may submit bids as a single entity or as a joint venture (JV). Bidder submitting bid in JV shall have to upload joint venture agreement along with partner(s) Bolpatra ID provided during bidder's registration. v. Bidders (all partners in case of JV) shall update their profile data and documents required during preparation and submission of their bids. vi. In case of bid submission in JV, the consent of the partners shall be obtained through the confirmation link sent to the registered email address and the partners shall have to acknowledge their confirmation. vii. Bidders shall submit the required documents as specified in Section I-Instruction to Bidders, Section II-Bid Data Sheet and Section III-Evaluation and Eligibility Criteria of the bidding document. The format of the documents shall be in PDF and/or web form as provisioned in the e-GP system. **The required forms and documents shall be part of bid.**

No.	Document	Requirement	Remarks
1.	Letter of Bid	Mandatory	PDF
2.	Bid Security / Bank Guarantee	Mandatory	PDF
3.	Firm or Company registration Certificate	Mandatory	PDF

4.	VAT and PAN registration Certificate	Mandatory (for domestic bidders only)	PDF
5.	Business Registration Licence	Mandatory	PDF
6.	Tax Clearance Certificate / Tax return submission evidence / evidence of time extension	Mandatory (for domestic bidders only)	PDF
7.	Power of Attorney of Bid signatory	Mandatory	PDF
8.	Joint venture agreement	Mandatory in case of JV Bids Only	PDF
9.	Completed Bill of Quantities (BoQ)	Mandatory	Online Forms
10.	Price Adjustment Table (if Applicable)	Mandatory (If Applicable)	Online Forms
11.	Additional documents specified in ITB 11.2 (h)	Mandatory (If any)	PDF

viii. After providing all the details and documents, the e-GP system will generate bid response documents for the bidder. Bidders shall download, verify and confirm the bid response documents prior to bid submission.

ix. For verifying the authentic user, the system will send one time password (OTP) in the registered e-mail address of the bidder. System will validate the OTP and then only allow bidders to submit their bid.

x. Electronically submitted bids can be modified and/or withdrawn through the system within the bid submission deadline.

xi. The bidder/bid shall meet the following requirements and conditions for e-submission of bids;

aa) The e-submitted bids must be readable through PDF reader.

bb) The bidders are fully responsible for using the e-GP system as per specified procedures and in no case the employer shall be held liable for bidder's inability to use the system.

cc) When a bidder submits electronic bid through the e-GP System, it is assumed that the bidder has prepared the bid by studying and examining the complete set of the bidding document and e-GP instruction including the provision stipulated in e-GP Directives.

ITB 19.1	**For bid submission purposes only, the Employer's address is:** Attention: Mr. Address: Sisne Rural Municipality, Rukum (East) Sisne-5, Rukumkoat Sisne, Rukum East Lumbini Province Nepal **The deadline for bid submission is:** Date: 2083-07-19 Time 12:00
ITB 22.1	The bid opening shall take place at: Address: Sisne Rural Municipality, Rukum (East) Sisne-5, Rukumkoat Sisne, Rukum East Lumbini Province Date: 2083-07-19 Time: ***13:00***
E. Evaluation and Comparison of Bids	

ITB 29.4	Bidders are ***"not permitted"*** to quote separate prices for lots (Contracts), and a single Bidder will be awarded multiple lots (Contracts) based on provision of ***Paragraph 1.1, Multiple Contracts Section III (Evaluation and Eligibility Criteria):***
ITB 29.5	The amount of the performance security be increased by Eight (8) percent of the quoted bid price (without VAT but Including PS).

SECTION - III

Evaluation and Eligibility Criteria

This Section contains all the criteria that the Employer shall use to evaluate bids and eligible Bidders. GoN/DP requires bidders to be qualified by meeting predefined eligibility criteria. In accordance with ITB 29, no other methods, criteria and factors shall be used. The Bidder shall provide all the information requested in the forms included in Section IV (Bidding Forms).

1. Evaluation

In addition to the criteria listed in ITB 29.2 (a) - (e) the following criteria shall apply:

1.1 Multiple Contracts

Pursuant to Sub-Clause ITB 29.4 of the Instructions to Bidders, if Works are grouped in multiple contracts, evaluation will be as follows:

Works are grouped in multiple contracts and pursuant to Sub-Clause 29.4 of the Instructions to Bidders, the Employer will evaluate and compare Bids on the basis of a contract, or a combination of contracts, or as a total of contracts in order to arrive at the least cost combination for the Employer by taking into account discounts offered by Bidders in case of award of multiple contracts.

1.2 Quantifiable Nonconformities and Omissions

Subject to ITB 13.2 and ITB 29.2, the evaluated cost of quantifiable nonconformities including omissions, is determined as follows:

[***Insert in bidding document:*** "Pursuant to ITB 27.3, the cost of all quantifiable nonmaterial nonconformities shall be evaluated, but excluding omission of prices in the Bill of Quantities. The Employer will make its own assessment of the cost of any nonmaterial nonconformities and omissions for the purpose of ensuring fair comparison of bids."]

2. Eligibility

Criteria	Compliance Requirements				Documents
Requirement	Single Entity	Joint Venture			Submission Requirements
		All Partners Combined	Each Partner	One Partner	
2.1 Conflict of Interest					
No conflicts of interest in accordance with ITB Sub-Clause 4.3.	must meet requirement	existing or intended JV must meet requirement	must meet requirement	not applicable	Letter of Bid
2.2 Government/DP Eligibility					
Not having been declared ineligible by government/DP, as described in ITB Sub-Clause 4.4.	must meet requirement	must meet requirement	must meet requirement	not applicable	Letter of Bid
2.3 Government-owned Entity					
Bidder required to meet conditions of ITB Sub-Clause 4.5.	must meet requirement	existing or intended JV	must meet requirement	not applicable	Letter of Bid, Forms ELI - 1,

		must meet requirement			ELI - 2, with attachments
2.4 UN Eligibility					
Not having been declared ineligible based on a United Nations resolution or Employer's country law, as described in ITB Sub-Clause 4.7.	must meet requirement	existing or intended JV must meet requirement	must meet requirement	not applicable	Letter of Bid
2.5 Bidder's Running Contracts					
Bidders have not yet secured five (5) number of construction contracts[2](in open competitive bidding) as described in ITB Sub-Clause 4.8.	must meet requirement	existing or intended JV must meet requirement	must meet requirement	not applicable	Letter of Bid, Form ELI-3
2.6 Other Eligibility					
Firm or Company Registration Certificate	must meet requirement	not applicable	must meet requirement	not applicable	Document attachment
Business Registration License	must meet requirement	not applicable	must meet requirement	not applicable	Document attachment
VAT and PAN Registration certificate	must meet requirement	not applicable	must meet requirement	not applicable	Document attachment
Tax clearances certificate for the F/Y **082/083** or Tax return submission evidence or evidence of tax time extension for.	must meet requirement	not applicable	must meet requirement	not applicable	Document attachment
Additional requirements ***[Insert if any]***	…….	……	……	……	……

Letter of Bid

The Bidder must accomplish the Letter of Bid in its letterhead clearly showing the Bidder's complete name and address.

Date: .....

Name of the contract: .....

Invitation for Bid No.: .....

To: ***[Insert Complete name of Employer]*** ……

We, the undersigned, declare that:

(a) We have examined and have no reservations to the Bidding Documents, including Addenda issued in accordance with Instructions to Bidders (ITB) Clause 8;

(b) We offer to execute in conformity with the Bidding Documents the following Works: ***[Insert Description of the works].***

(c)The total price of our Bid, excluding any discounts offered in item (d) below is: ***[Insert one of the options below as appropriate]*** or when left blank is the Bid Price indicated in the Bill of Quantities.

Option 1, in case of single contract: Total price is: ***[insert the total price of the Bid in words and figures]***;

Or

Option 2, in case of multiple lots (contracts): (i) Total price of each lot (contracts): ***[insert the total price of each lot in words and figures]***; (ii) Total price of subject contract [say Lot1] and Lot2 [another contract] [insert the total price in words and figures]; (iii) Total price of subject contract [say Lot1]and Lot3 [another contract] ***[insert the total price in words and figures]***; Total price of subject contract [say Lot1], Lot2 [another contract], Lot3 [another contract], ***……..[insert the total price in words and figures];***

(d) The discounts offered and the methodology for their application for subject contract [single contract] are:…….. [For Bidding Documents not provisioning multiple contracts]

Add following if Bidding Document provisions applicability of multiple contracts

The discounts offered and the methodology for their application for subject contract [say Lot1] and Lot2 [another contract] are:……..

The discounts offered and the methodology for their application for subject contract [say Lot1] and Lot3 [another contract] are:……..

The discounts offered and the methodology for their application for subject contract [say Lot1], Lot2 [another contract] and Lot3 [another contract],……, are:……..

[Note:

1. Formulate possible combinations depending upon the number of lots under Bidding Process and modify accordingly Paragraph (c) and (d)]

(e) Our bid shall be valid for a period of ……..***[insert validity period as specified in ITB 15.1]*** days from the date fixed for the bid submission deadline in accordance with the Bidding Documents, and it shall remain binding upon us and may be accepted at any time before the expiration of that period;

(f) If our bid is accepted, we commit to obtain a performance security in accordance with the

Bidding Document;

(g) Our firm, including any subcontractors or suppliers for any part of the Contract, have nationalities from eligible countries or any countries [insert the nationality of the Bidder, including that of all parties that comprise the Bidder if the Bidder is a consortium or association, and the nationality of each Subcontractor and Supplier];

(h) We, including any subcontractors or suppliers for any part of the contract, do not have any conflict of interest in accordance with ITB 4.3;

(i) We are not participating, as a Bidder or as a subcontractor, in more than one bid in this bidding process in accordance with ITB 4.3;

(j) Our firm, its affiliates or subsidiaries, including any Subcontractors or Suppliers for any part of the contract, has not been declared ineligible, under the Employer's country laws or official regulations or by an act of compliance with a decision of the United Nations Security Council;

(k) *[*We are not a government owned entity*] / [*We are a government owned entity but meet the requirements of ITB 4.5*]*; *

(l) We understand that this bid, together with your written acceptance thereof included in your notification of award, shall constitute a binding contract between us, until a formal contract is prepared and executed;

(m) We declare that, we have not been black listed as per ITB 3.4 and no conflict of interest in the proposed procurement proceedings and we have not been punished for an offense relating to the concerned profession or business.

(n) We declare that we have not yet secured five (5) number of constructions contracts[3] (in open competitive bidding) as described in ITB Sub-Clause 4.9.

(o) We understand that you are not bound to accept the bid closest to the Average Bid Price or any other bid that you may receive; and

(p) If awarded the contract, the person named below shall act as Contractor's Representative:

(q) We agree to permit the Employer/DP or its representative to inspect our accounts and records and other documents relating to the bid submission and to have them audited by auditors appointed by the Employer.

(r) We declare that we are solely responsible for the authenticity of the documents submitted by us. The document and information submitted by us are true and correct. If any document/information given is found to be concealed at a later date, we shall accept any legal actions by the Employer.

Name: ***[insert complete name of the person signing the Bid]***.....

In the capacity of ***[insert legal capacity of person signing the Bid]***.....

Signed ***[signature of the person whose name and capacity are shown above]***……

Duly authorized to sign the Bid for and on behalf of ***[insert complete name of the Bidder]***……

Date ***[insert date of signing]***…….....

Table of Price Adjustment Data[4]

[To be used if Price Adjustment is applicable as per GCC 53.1]

Code	Index Description	Source of Index*	Base Value and Date	Employer's Proposed Weighting Range (coefficient)	Bidder's Proposed Weighting (coefficient)**
1	**2**	**3**	**4**	**5**	**6**
	Non - adjustable (A)			0.15	0.15
	Labor (b)				
	Materials (c)***				
	…				
	Equipment usage (d)				
		Total			**1.00**

*Normally following source of index shall apply. Public Entity shall choose applicable Index for each item.

(a) Labor:
"National Salary and Wage Rate Index"- "Construction Labor" of Nepal Rastra Bank **or**
rate fixed by District Rate Fixation Committee

(b) Material: "National Wholesale Price Index" - Construction Materials" of Nepal Rastra Bank

(c) Equipment usage:
"National Wholesale Price Index"-"Machinery and Equipment" of Nepal Rastra Bank **or**
"Fuel" Price fixed by Nepal Oil Corporation.

** Bidders proposed weightings should be within the range specified by the Employer in column - 5

Table of Price Adjustment Data[5]

[To be used if Price Adjustment is applicable as per GCC 53.6]

Code	Construction Material*	Unit	Base Price (NRs/Unit) (Ex-factory)	Source (Factory)**
1	**2**	**3**	**4**	**5**

* Major construction materials to be specified by Employer in column - 2.

** Base Price and source normally to be specified by Employer (or alternatively informed to be proposed by bidder) in column 4 and5.

Bid Security

Bank Guarantee

Bank's Name, and Address of Issuing Branch or Office

(On letterhead paper of the Bank)

Beneficiary: ..... ***[Insert name and address of Employer]*** …….

Date: ……...

Bid Security No.: .....

We have been informed that . …… ***.[insert name of the Bidder]*** (hereinafter called "the Bidder") intends to submit its bid (hereinafter called "the Bid") to you for the execution of ……... ***[Insert name of Contract*** **.** …… under Invitation for Bids No. ……***[insert IFB No.]*** ("the IFB").

Furthermore, we understand that, according to your conditions, bids must be supported by a bid guarantee.

At the request of the Bidder, we……. . ***[Insert name of Bank]*** …….. hereby irrevocably undertake to pay you any sum or sums not exceeding in total an amount of Nepalese Rupees. . ***……...[Insert amount in figures and amount in words]*** upon receipt by us of your first demand in writing accompanied by a written statement stating that the Bidder is in breach of its obligation(s) under the bid conditions, because the Bidder:

(a) has withdrawn or modifies its Bid:

(i) during the period of bid validity specified by the Bidder on the Letter Bid, in case of electronic submission

(ii) from the period twenty-four hours prior to bid submission deadline up to the period of bid validity specified by the Bidder on the Letter of Bid, in case of hard copy submission; or

(b) does not accept the correction of errors in accordance with the Instructions to Bidders (hereinafter "the ITB"); or

(c) having been notified of the acceptance of its Bid by the Employer during the period of bid validity, (i) fails or refuses to execute the Contract Agreement, or (ii) fails or refuses to furnish the performance security, in accordance with the ITB; or

(d) is involved in fraud and corruption in accordance with the ITB; or

(e) a Bidder changes the prices or substance of the bid while providing information pursuant to ITB 24.1; or

(f) if the bidder fails to inform about the saturation of the maximum number of contracts as per ITB 4.9.

This guarantee will remain in force up to and including the date ……**number**……days after the deadline for submission of Bids as such deadline is stated in the instructions to Bidders or as it may be extended by the Employer, notice of which extension(s) to the Bank is hereby waived. Any demand in respect of this guarantee should reach the Bank not letter than the above date.

This Bank guarantee shall not be withdrawn or released merely upon return of the original guarantee by the Bidder unless notified by you for the release of the guarantee.

This guarantee is subject to the Uniform Rules for Demand Guarantees (URDG), 2010 Revisions, ICC Publication No. 758 .except that the supporting statement under Article 15(a) is hereby excluded.

. . .Bank's seal and authorized signature(s) . . .

Bidder's Information Format

Site Organization

Method Statement

Mobilization Schedule

Construction Schedule

Others

Bidder’s Information

Form ELI - 1: Bidder’s Information Sheet

Bidder's Information	
Bidder's legal name	
In case of JV, legal name of each partner	
Bidder's country of constitution	
Bidder's year of constitution	
Bidder's legal address in country of constitution	
Bidder's authorized representative (name, address, telephone numbers, fax numbers, e-mail address)	
Attached are copies of the following original documents.	
1. In case of single entity, articles of incorporation or constitution of the legal entity named above, in accordance with ITB 4.1 and 4.2. 2. Authorization to represent the firm or JV named in above, in accordance with ITB 17.2. 3. In case of JV, letter of intent to form JV or JV agreement, in accordance with ITB 4.1. 4. In case of a government-owned entity, any additional documents not covered under 1 above required to comply with ITB 4.5.	

Form ELI - 2: JV Information Sheet

Each member of a JV must fill in this form

JV / Specialist Subcontractor Information	
Bidder's legal name	
JV Partner's or Subcontractor's legal name	
JV Partner's or Subcontractor's country of constitution	
JV Partner's or Subcontractor's year of constitution	
JV Partner's or Subcontractor's legal address in country of constitution	
JV Partner's or Subcontractor's authorized representative information (name, address, telephone numbers, fax numbers, e-mail address)	
Attached are copies of the following original documents.	
1. articles of incorporation or constitution of the legal entity named above, in accordance with ITB 4.1 and 4.2. 2. Authorization to represent the firm named above, in accordance with ITB .2. 3. In the case of government-owned entity, documents establishing legal and financial autonomy and compliance with commercial law, in accordance with ITB 4.5.	

Form ELI - 3: Bidder's Running Contracts****

Each member of a JV must fill in this form

	Bidder's Running Contracts				
Name of office	**Contract Identification no.**	**Source of Fund***	**Date of issuance of Letter of Acceptance**	**Status of contract****	**Date of Issuance of Taking Over Certificate*****

*

Part – II

REQUIREMENTS

Table of Clauses

Section - V Works Requirements 46

Scope of Work …….. 47

Specifications ……..... 48

Notes on the Specifications ……..... 48

Sample Clause: Equivalency of Standards and Codes ……..... 49

Drawings ……..……..50

Supplementary Information ……..... 51

Section - VI Bill of Quantities ... ……... 52

Notes for Unit Rate Contracts……... 52

Preamble of Bill of Quantities …….. 53

Bill of Quantities 56

SECTION - V
Works Requirements

This Section contains the Scope of Work, Specification, the Drawings, and supplementary information that describe the Works to be procured.

Scope of Work

[insert brief scope of works.]

Specifications

Notes on the Specifications

A set of precise and clear specifications is a prerequisite for Bidders to respond realistically and competitively to the requirements of the Employer without qualifying or conditioning their Bids. The specifications must be drafted to permit the widest possible competition and, at the same time, present a clear statement of the required standards of workmanship, materials, and performance of the goods and services to be procured. Only if this is done will the objectives of economy, efficiency and fairness in procurement be realized, responsiveness of Bids be ensured, and the subsequent task of bid evaluation facilitated. The specifications should require that all goods and materials to be incorporated in the Works be new, unused, of the most recent or current models, and incorporate all recent improvements in design and materials unless provided otherwise in the Contract.
Samples of specifications from previous similar projects are useful in this respect. The use of metric units is encouraged by the Funding Agency in case of funding assisted projects. Most specifications are normally written specially by the Employer or Project Manager to suit the Contract Works in hand. The available standard specification of works of Ministry of Physical Infrastructure and Transport, DoLI and Other line Ministries can be adopted for respective civil construction works.
There are considerable advantages in standardizing General Specifications for repetitive Works in recognized public sectors, such as highways, urban housing, irrigation, and water supply, in the same country or region where similar conditions prevail. The General Specifications should cover all classes of workmanship, materials, and equipment commonly involved in construction, however it may not necessarily be adequate to be used in a particular Works Contract and may necessitate preparation of Particular (Special) Specifications to amend and or supplement the provision of the General Specifications to meet the requirement of the particular Works.

Care must be taken in drafting specifications to ensure that they are not restrictive. In the specification of standards for goods, materials, and workmanship, recognized international standards should be used as much as possible. Where other particular standards are used, whether national standards of Nepal or other standards, the specifications should state that goods, materials, and workmanship that meet other authoritative standards, and which ensure substantially equal or higher quality than the standards mentioned, will also be acceptable.

Employers should decide whether technical solutions to specified parts of the Works are to be permitted. Alternatives are appropriate in cases where obvious (and potentially less costly) alternatives are possible to the technical solutions indicated in the Procurement Documents for certain elements of the Works, taking into consideration the comparative specialized advantage of potential bidders. For example:

The Employer should provide a description of the selected parts of the Works with appropriate references to Drawings, Specifications, Bill of Quantities, and Design or Performance criteria, stating that the alternative solutions if applicable shall be at least structurally and functionally equivalent to the basic design parameters and specifications.

Such alternative solutions shall be accompanied by all information necessary for a complete evaluation by the Employer, including drawings, design calculations, technical specifications, breakdown of prices, proposed construction methodology, and other relevant details.

Sample Clause: Equivalency of Standards and Codes

Wherever reference is made in the Contract to specific standards and codes to be met by the goods and materials to be furnished, and work performed or tested, the provisions of the latest current edition or revision of the relevant standards and codes in effect shall apply, unless otherwise expressly stated in the Contract. Where such standards and codes are national, or relate to a particular country or region, other authoritative standards that ensure a substantially equal or higher quality than the standards and codes specified will be accepted subject to the Project Manager's prior review and written consent. Differences between the standards specified and the proposed alternative standards shall be fully described in writing by the Contractor and submitted to the Project Manager at least 30 days prior to the date when the Contractor desires the Project Manager's consent. In the event the Project Manager determines that such proposed deviations do not ensure substantially equal or higher quality, the Contractor shall comply with the standards specified in the documents. These Notes for Preparing Specifications are intended only as information for the Employer or the person drafting the Procurement Documents. They should not be included in the final documents.

Specifications Prevails DUDBC and DWSS according to the nature of works.

Drawings

Note:

1. It is customary to bind the drawings in a separate volume, which is often larger than other volumes of the contract documents. The size will be dictated by the scale of the drawings, which must not be reduced to the extent that details are reduced illegible.

2. A simplified map showing the location of the Site in relation to the local geography, indicating major roads, posts, airports, and railroads, is helpful.

3. The construction drawings, even if not fully developed, must show sufficient details to enable bidders to understand the type and complexity of the work involved and the price the Bill of Quantities.

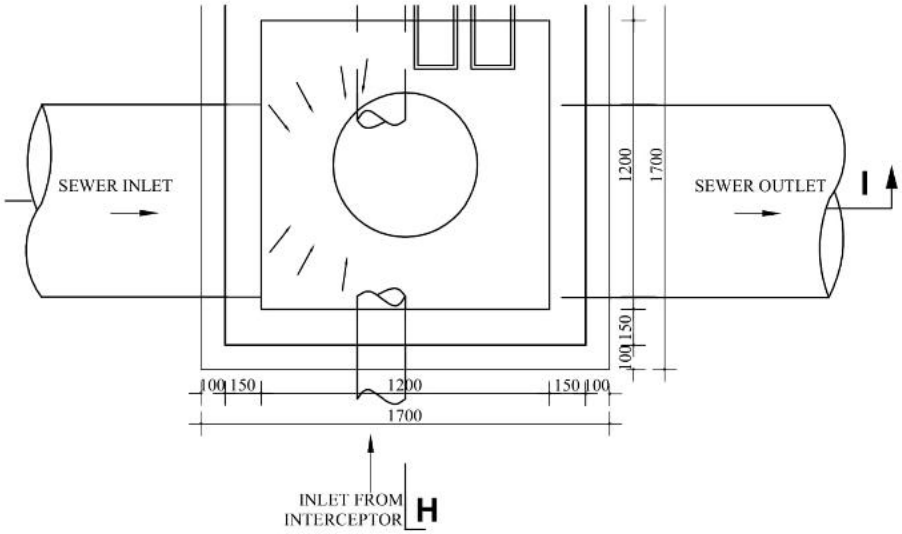

PLAN OF RCC MANHOLE (NEW TYPE 2)
(1:25)

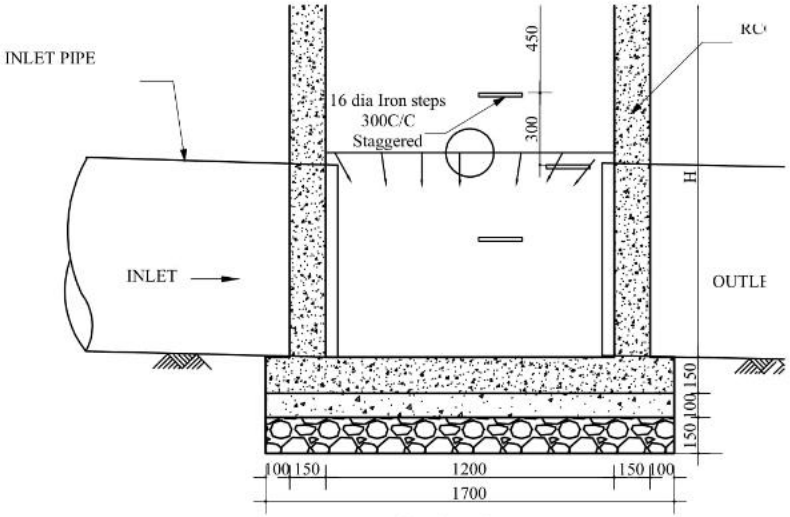

SECTION I-I
(1:25)

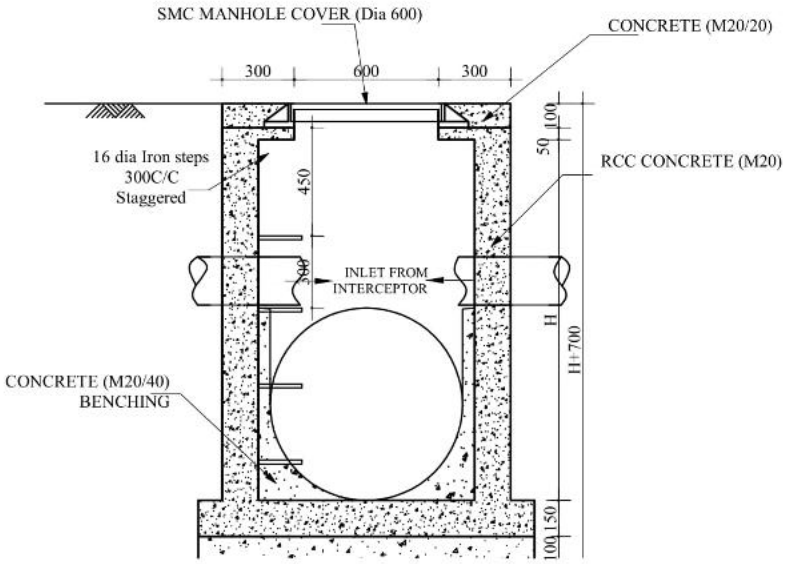

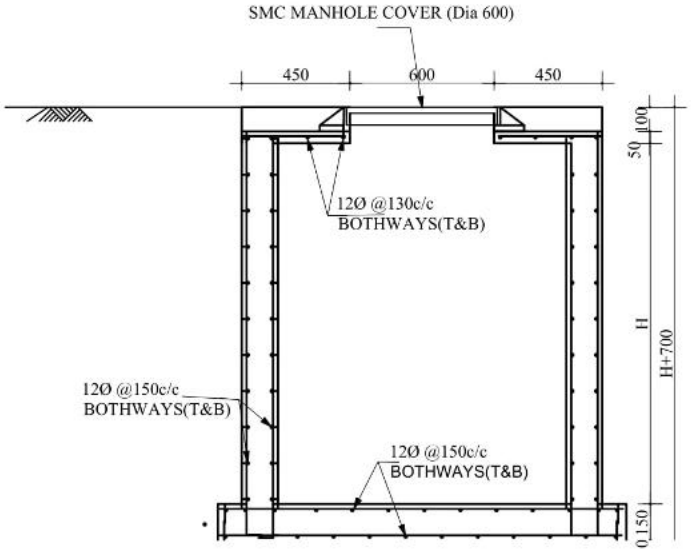

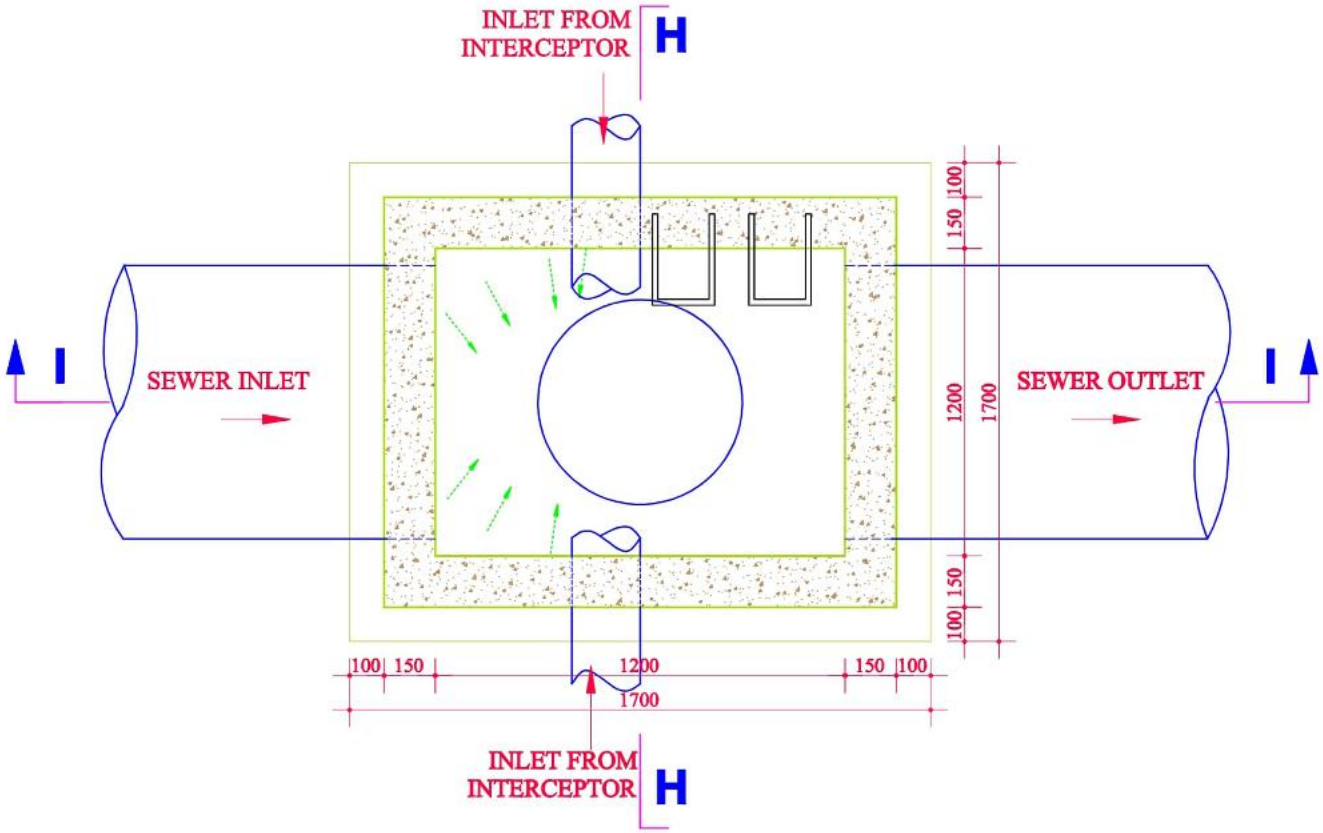

PLAN OF RCC MANHOLE (NEW TYPE 2)
(1:25)

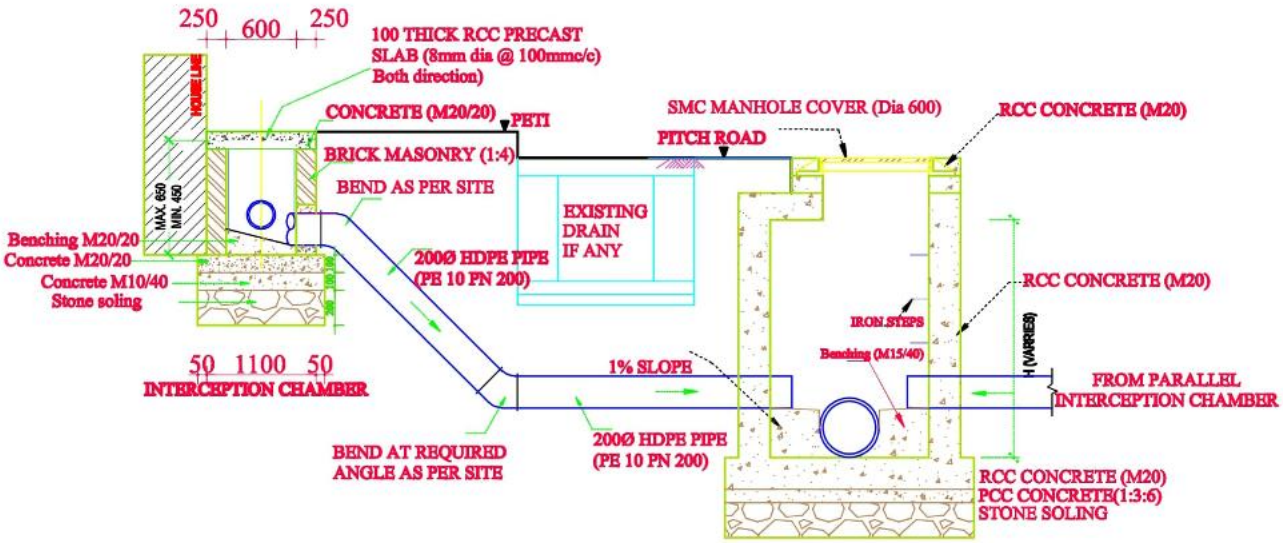

SECTION F-F

Scale 1:40

TYPICAL CROSS SECTION OF INSPECTION CHAMBER & MANHOLE (DRAIN CROSSING)

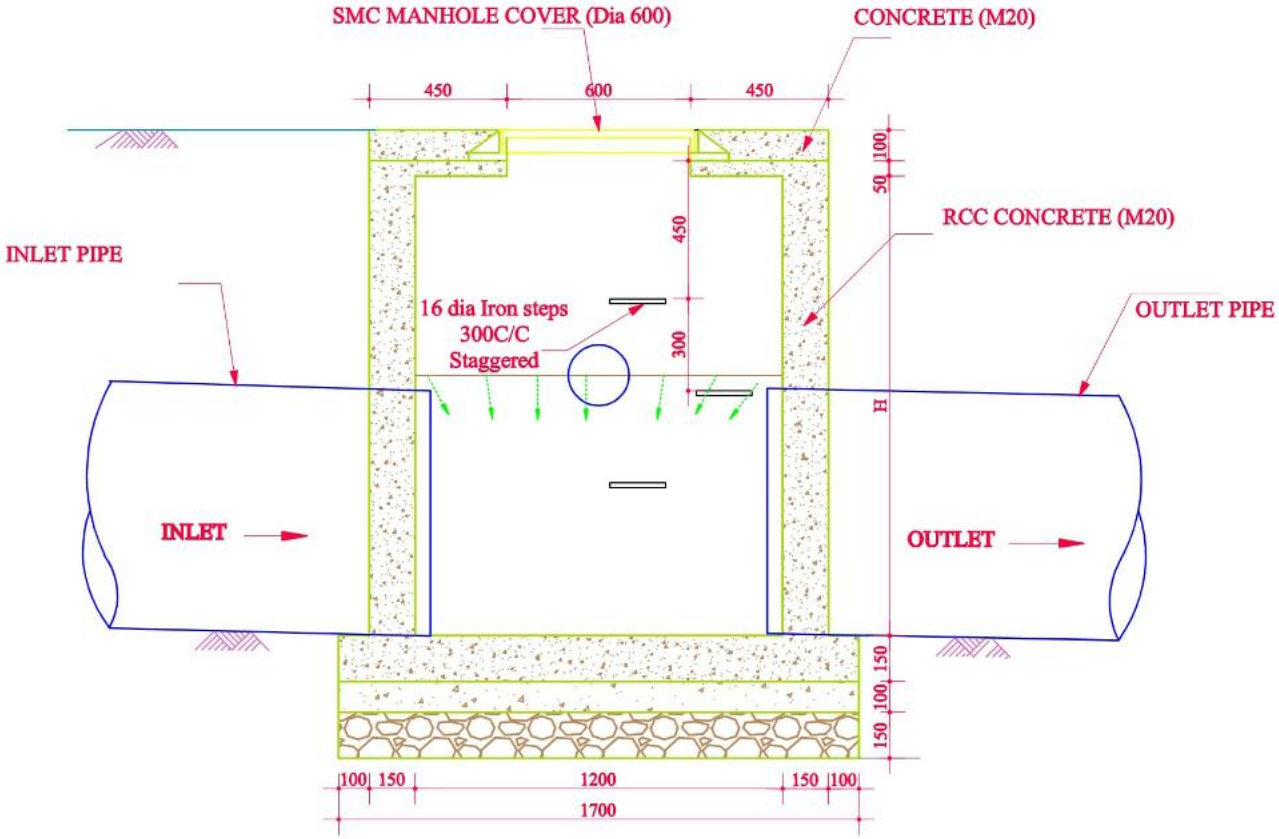

SECTION I-I
(1:25)

Supplementary Information

[insert supplementary information if any]

SECTION - VI

Bill of Quantities[6]

Notes for Unit Rate Contracts:

Objectives

The objectives of the Bill of Quantities are

(a) to provide sufficient information on the quantities of Works to be performed to enable Bids to be prepared efficiently and accurately; and

(b) when a Contract has been entered into, to provide a priced Bill of Quantities for use in the periodic valuation of Works executed.

In order to attain these objectives, Works should be itemized in the Bill of Quantities in sufficient detail to distinguish between the different classes of Works, or between Works of the same nature carried out in different locations or in other circumstances which may give rise to different considerations of cost. Consistent with these requirements, the layout and content of the Bill of Quantities should be as simple and brief as possible.

Content

The Bill of Quantities should be divided generally into the following sections:

(a) Preamble;

(b) Work Items (grouped into parts);

(c) Day works Schedule;

d) Provisional Sums; and

(d) Summary.

Preamble

The Preamble should indicate the inclusiveness of the unit prices, and should state the methods of measurement which have been adopted in the preparation of the Bill of Quantities and which are to be used for the measurement of any part of the works.

Work Items

The items in the Bill of Quantities should be grouped into sections to distinguish between those parts of the Works which by nature, location, access, timing, or any other special characteristics may give rise to different methods of construction, or phasing of the Works, or considerations of cost. General items common to all parts of the works may be grouped as a separate section in the Bill of Quantities.

Day work Schedule

A Day work Schedule should be included only if the probability of unforeseen work, outside the items included in the Bill of Quantities, is high. To facilitate checking by the Employer of the realism of rates quoted by the Bidders, the Day work Schedule should normally comprise the following:

---

[6]In lump sum contracts, delete "Bill of Quantities" and replace with "Schedule of Activities" throughout this section.

(a) *A list of the various classes of labour, materials, and Constructional Plant for which basic day work rates or prices are to be inserted by the Bidder, together with a statement of the conditions under which the Contractor will be paid for work executed on a day work basis.*
(b) *Nominal quantities for each item of Day work, to be priced by each Bidder at Day work rates as bid. The rate to be entered by the Bidder against each basic Day work item should include the Contractor's profit, overheads, supervision, and other charges.*

Provisional Sums

A general provision for physical contingencies (quantity overruns) may be made by including a provisional sum in the Summary Bill of Quantities. Similarly, a contingency allowance for possible price increases should be provided as a provisional sum in the Summary Bill of Quantities. The inclusion of such provisional sums often facilitates budgetary approval by avoiding the need to request periodic supplementary approvals as the future need arises. Where such provisional sums or contingency allowances are used, the Contract Data should state the manner in which they will be used, and under whose authority (usually the Project Manager's).

Summary

The Summary should contain a tabulation of the separate parts of the Bill of Quantities carried forward, with provisional sums for Day work, for physical (quantity) contingencies, and for price contingencies (upward price adjustment) where applicable.

These Notes for Preparing Specifications are intended only as information for the Employer or the person drafting the Bidding documents. They should not be included in the final documents.

Preamble of Bill of Quantities

A. General

1. The Bill of Quantities shall be read in conjunction with the Instructions to Bidders, General and Special Conditions of Contract, Technical Specifications, and Drawings.

2. The quantities given in the Bill of Quantities are estimated and provisional, and are given to provide a common basis for bidding. The basis of payment will be the actual quantities of work ordered and carried out, as measured by the Contractor and verified by the Project Manager and valued at the rates and prices bid in the priced Bill of Quantities, where applicable, and otherwise at such rates and prices as the Project Manager may fix within the terms of the Contract.

3. For any item for which measurement is based on records made before or during construction the records shall be prepared and agreed between the Engineer and the Contractor. Should the Contractor carry out such work without the prior agreement of the Engineer, the Engineer may request the Contractor to carry out investigations to confirm the extent of the work and the quantity of work certified for payment shall be solely at the Engineer's discretion. The cost of any such investigation shall be borne by the Contractor.

4. The rates and prices bid in the priced Bill of Quantities shall, except as otherwise provided under the Contract, include all construction equipment, labor, supervision, materials, erection, maintenance, insurance, profit, taxes, and duties, together with all general risks, liabilities, and obligations set out or implied in the Contract.

5. A rate or price shall be entered against each item in the priced Bill of Quantities, whether quantities are stated or not. The cost of items against which the Contractor has failed to enter a rate or price shall be deemed to be covered by other rates and prices entered in the Bill of Quantities.

6. The whole cost of complying with the provisions of the Contract shall be included in the Items provided in the priced Bill of Quantities, and where no Items are provided, the cost shall be deemed to be distributed among the rates and prices entered for the related Items of Work.

7. General directions and descriptions of work and materials are not necessarily repeated nor summarized in the Bill of Quantities. References to the relevant sections of the Contract documentation shall be made before entering prices against each item in the priced Bill of Quantities. The Specification Clause references, where given in the item description of the Bills of Quantities, are for the convenience of bidders and generally refer to the principal relevant- specification clause but do not necessarily represent the whole of the specification requirements for the work required within the item. The presence of a Specification clause reference shall not in any way reduce the Bidders obligation to complete work in accordance with all the requirements of the Specification.

8. Provisional Sums included and so designated in the Bill of Quantities shall be expended in whole or in part at the direction and discretion of the Project Manager in accordance with the Conditions of Contract.

9. The method of measurement of completed work for payment shall be in accordance with the Specifications.

10. The abbreviations and symbols used in this Bill of Quantities are: ***[Insert as applicable]***

B. Day work Schedule

a) **General**

1. Work shall not be executed on a day work basis except by written order of the Project Manager. Bidders shall enter basic rates for day work items in the Schedules. These rates shall apply to any quantity of day work ordered by the Project Manager. Nominal quantities have been indicated against each item of day work, and the extended total for day work shall, be carried forward as a Provisional Sum to the Summary Total Bid Amount. Unless otherwise adjusted, payments for day work shall be subject to price adjustment in accordance with the provisions in the Conditions of Contract.

b) Day work Labor

1. In calculating payments due to the Contractor for the execution of day works, the hours for labor will be reckoned from the time of arrival of the labor at the job site to execute the particular item of day work to the time of departure from the job site, but excluding meal breaks and rest periods. Only the time of classes of labor directly doing work ordered by the Project Manager and are competent to perform such work will be measured. The time of gangers (charge hands) actually doing work with the gangs will also be measured but not the time of foremen or other supervisory personnel.
2. The Contractor shall be entitled to payment in respect of the total time that labor is employed on day work, calculated at the basis rates entered by it in the " SCHEDULE OF DAY WORK RATES: 1. LABOR". The rates for labor shall be deemed to cover all costs to the Contractor including (but not limited to) i) the amount of wages paid to such labor, transportation time, overtime, subsistence allowances, ii) any sums paid to or on behalf of such labor for social benefits in accordance with Nepal law, iii) Contractor's profit, overheads, superintendence, liabilities and insurance and iv) charges incidental to the foregoing.

c) Day work Equipment

1. The Contractor shall be entitled to payments in respect of Constructional Plant already on site and employed on day work at the basis rental rates entered by him in the “SCHEDULE OF DAY WORK RATES:2 EQUIPMENT”. The said rates shall be deemed to include due and complete allowance for depreciation, interest, indemnity and insurance, repairs, maintenance, supplies, fuel, lubricant, and other consumables and all overhead, profit and administrative costs related to the use of such equipment. The cost of drivers, operators and assistants also shall be included in the rate of the equipment and no separately payment shall be made for it.
2. In calculating the payment due to the Contractor for Constructional Plant employed on day work, only the actual number of working hours will be eligible for payment, except that where applicable and agreed with the Project

Manager, the travelling time from the part of the Site where the Construction Plant was located when ordered by the Project Manager to be employed on day work and the time for return journey there to shall be included for payment.

d) Day work Materials

1. The Contractor shall be entitled to payment in respect of materials used for day work (except for materials for which the cost is included in the percentage addition to labor costs as detailed heretofore), at the rates entered by him in the "SCHEDULE OF DAY WORK RATES: 3 MATERIALS" and shall be deemed to include overhead charges and profit as follows;
   (i) the rates for materials shall be calculated on the basis of the invoiced price, freight, insurance, handling expenses, damage, losses, etc. and shall provide for delivery to store for stockpiling at the Site.
   (ii) the cost of hauling materials for use on work ordered to be carried out as day work, from the store or stockpile on the Site to the place where it is to be used also shall be include in the same rate.

Provisional Sums

The estimated cost of specialized work to be carried out, or of special goods to be supplied, by other contractors should be indicated in the relevant part of the Bill of Quantities as a particular provisional sum with an appropriate brief description. A separate procurement procedure is normally carried out by the Employer to select such specialized contractors. To provide an element of competition among the Bidders in respect of any facilities, amenities, attendance, etc., to be provided by the successful Bidder as prime Contractor for the use and convenience of the specialist contractors, each related provisional sum should be followed by an item in the Bill of Quantities inviting the Bidder to quote a sum for such amenities, facilities, attendance, etc.

Government of Nepal

Sisne Rural Municipality

Office of Rural Municipal Executive

Rukumkot, Rukum(East)

Lumbini Province, Nepal

BILL OF QUANTITIES

Name of Project: Chokbazar Pakhagaun Hundai Serakhet Dhal Nikasa Yojana

Location: Sisne Rural Municipality- 5 & 6 **F/Y:2083/84**

Section: Ruli Khola -Pakhagaun and Bahunthana-Maripakha-Aalachiureni-Luspa

S.N.	Description of works	Unit	Quantity	Bid Rates in NRs		Amount	Remarks
				In Figure	In Words		
A. Provisional Sums							
1	Insurances for the loss of damage to works, plant, material, equipment, property and personal injury or death and as stipulated in contract Data.	PS	1.00	100,000.00	One Lakhs Only.	100,000.00	
2	Carry out additional tests for material and works as required and instructed by the Engineer.	PS	1.00	30,000.00	Twenty Thousand Only.	30,000.00	
3	Providing and installation of project signboards with size of 1.8 x 1.2 m as per specification and instruction of engineer.	PS	1.00	10,000.00	Ten Thousand Only.	10,000.00	
4	Supply & provide Personal Protective Equipment (PPE) to all workers including safety helmet, safety shoes/gumboots, hand gloves, safety jacket, face mask, first add kit box and other necessary safety gears as instructed by the Engineer.	PS	1.00	20,000.00	Twenty Thousand Only.	20,000.00	

Total Cost(A)						**160,000.00**	
B. SEWER NETWORK							
1. RCC Normal Manhole							
1	Clearing and grubbing road land including uprooting rank vegetation, grass, bushes, shrubs, saplings and trees girth up to 300 mm, removal of stumps of trees cut earlier and disposal of unserviceable materials and stacking of serviceable Material to be used or auctioned, up to a lead of 30 meters including removal and disposal of top organic soil not exceeding 150 mmin thickness.A. In area of light jungle (less than 15 number per 100 sqm) [Mechanical Means]	Sqm	60.16				
2	Earthwork excavation of foundation in ordinary soils of structures, including construction of shoring and bracing, removal of stumps and other deleterious matter and backfilling with approved Material as per Drawing and Technical Specifications. [depth upto 3m]. [15% Manual and 85 % Mechanical Means]	Cum	175.65				
3	Providing suitable material and Back filling behind abutment, wing wall and return wall using Locally available material all complete as per Drawing and Technical Specifications. [Manual Means with watering]	Cum	21.08				
4	Providing and laying of hand pack Stone soling with 150 to 200 mm thick stones and packing with smaller stone on prepared surface as per Drawing and Technical Specifications.	Cum	9.02				

5	Providing and laying of plain cement concrete M10 (or 1:3:6 for nominal mix) in Foundation complete as per Drawing and Technical Specifications.	Cum	17.23				
6	Providing and laying of Plain/Reinforced Cement Concrete in Foundation complete as per Drawing and Technical Specifications. [PCC grade M20]	Cum	54.17				
7	Providing and laying , fitting and placing un-coated Mild steel / HYSD reinforcement complete in foundation as per drawing and technical specification	Kg	10964.27				
8	Providing , Preparing and Installing form work including necessary supports and removing after completion for foundation and footings. [Class F1 Finish using Timber (soft wood)]	Sqm	639.90				
9	Providing and fixing in position 600 mm Ø SMC manhole cover (Frame 725mm, cover 600mm, Round, 40 Tons Frame 90 mm thick and cover 60mm thick) with frame & other necessary accessories all complete as per drawings, specifications & instruction of the Engineer.	No.	25.00				
10	Providing and fixing in position Iron steps (12 mm Ø) in manholes all complete as per drawings, specifications & instruction of the Engineer.	Kg	257.04				
2. RCC CANAL (Ruli Khola Section)							

1	Earthwork excavation of foundation in ordinary soils of structures, including construction of shoring and bracing, removal of stumps and other deleterious matter and backfilling with approved Material as per Drawing and Technical Specifications. [depth upto 3m]. [15% Manual and 85 % Mechanical Means]	Cum	75.78				
2	Providing suitable material and Back filling behind abutment, wing wall and return wall using Locally available material all complete as per Drawing and Technical Specifications. [Manual Means with watering]	Cum	22.73				
3	Providing and laying of hand pack Stone soling with 150 to 200 mm thick stones and packing with smaller stone on prepared surface as per Drawing and Technical Specifications.	Cum	9.54				
4	Providing and laying of plain cement concrete M10 (or 1:3:6 for nominal mix) in Foundation complete as per Drawing and Technical Specifications.	Cum	6.36				
5	Providing and laying of Plain/Reinforced Cement Concrete in Foundation complete as per Drawing and Technical Specifications. [PCC grade M20]	Cum	31.38				
6	Providing and laying , fitting and placing un-coated Mild steel / HYSD reinforcement complete in foundation as per drawing and technical specification	Kg	2956.00				

7	Providing , Preparing and Installing form work including necessary supports and removing after completion for foundation and footings. [Class F1 Finish using Timber (soft wood)]	Sqm	288.60				
3. HOUSEHOLD CONNECTION							
1	Providing, jointing and laying HDPE pipes with or without collar etc. complete in place as per Drawing and Technical Specifications. [110 mm / 125 mm outer dia]	m	60.00				
4. SEWER LINE QUANTITY							
1	Earthwork excavation of foundation in ordinary soils of structures, including construction of shoring and bracing, removal of stumps and other deleterious matter and backfilling with approved Material as per Drawing and Technical Specifications. [depth upto 3m]. [15% Manual and 85 % Mechanical Means]	Cum	858.51				
2	Providing suitable material and Back filling behind abutment, wing wall and return wall using Locally available material all complete as per Drawing and Technical Specifications. [Manual Means with watering]	Cum	699.38				
3	Providing and Laying HDPE Double Wall Corrugated (DWC) SN8 Pipe mentioned below including rubber gasket jointing as per Drawing, Specification and instruction of the engineer.						
a.	400 mm Internal dia. (DWC Pipe)	Rm	24.00				
b.	600 mm Internal dia. (DWC Pipe)	Rm	186.00				
c.	800 mm Internal dia. (DWC Pipe)	Rm	132.00				
			Total Cost(B)				

VAT @ 13%				
Total Rs. With PS(A+B)				
Grand Total Rs.				
On behalf of contractor				
Contractor's Signature :				
Firm :				
Seal :				
Contractor's Name :				
Permanent Address :				
Phone :				
Date :				

PART-III CONDITIONS OF CONTRACT AND CONTRACT FORMS

Table of Clauses

General **5**
1. Definitions 5
2. Interpretation 6
3. Language and Law 7
4.Contract Agreement 7
5. Assignment 7
6. Care and Supply of Documents 7
7. Confidential Details 7
8. Compliance with Laws 8
9. Joint and Several Liability 8
10. Project Manager's Decisions 8
11. Delegation 8
12. Communications 8
13. Subcontracting 8
14. Other Contractors 9
15 Personnel and Equipment 9
16. Employer's and Contractor's Risk 9
17. Employer's Risks 9
18. Contractor's Risks 10
19. Insurance 10
20. Site Investigation Reports 10
21. Contractor to Construct the Works 10
22. The Works to Be Completed within intended Completion Date 10
23. Design by contractor and Approval by the Project Manager 11
24. Safety, Security and Protection of the Environment 11
25. Discoveries 11
26. Possession of the Site 12
27. Access to the Site 12
28.Instructions, Inspections and Audits 12
29.Dispute Settlement 12
30. Procedures for Disputes 12
B. Staff and Labor **12**
31. Forced Labor 12
32. Child Labor 12
33.Non-discrimination and Equal Opportunity 12
B1. Time Control **13**
34. Program 13
35. Extension of the Intended Completion Date 13
36. Acceleration 13
37. Delays Ordered by the Project Manager 14
38.Management Meetings 14
39. Early Warning 14

C. Quality Control **14**
40. Identifying Defects 14
41. Tests 14
42.Correction of Defects 14
43.Uncorrected Defects 14
D. Cost Control **14**
44. Contract Price 14
45. Changes in the Contract Price 15
46. Variations 15
47.Cash Flow Forecasts 15
48.Payment Certificates 15
49. Payments 16
50.Compensation Events 16
51. Tax 17
52. Currency 17
53.Price Adjustment 17
54. Retention 18
55.Liquidated Damages 19
56. Bonus 19
57.Advance Payment 19
58. Securities 20
59. Day works 20
60. Cost of Repairs 20
F. Force Majeure **20**
61.Definition of Force Majeure 20
62. Notice of Force Majeure 21
63. Duty to Minimize Delay 21
64. Consequences of Force Majeure 21
65. Force Majeure Affecting Subcontractor 21
66.Optional Termination, Payment and Release 21
67. Release from Performance 22
G. Finishing the Contract **22**
68. Completion 22
69. Taking Over 22
70. Final Account 22
71. Operating and Maintenance Manuals 23
72. Termination 23
73.Fraud and Corruption 24
74. Black Listing 24
75. Payment upon Termination 25
76. Property 25
77.Release from Performance 25
78. Suspension of DP Loan/Credit/Grant 25
79. Eligibility 25
80.ProjectManager's Duties and Authorities 26
81.Quarries and Spoil Dumps 26
82. Local Taxation 26
83. Value Added Tax 26
84. Income Taxes on Staff 26
85. Duties, Taxes and Royalties 26

86. Member of Government, etc, not Personally Liable 27
87. Approval of Use of Explosives 27
89. Permission for Blasting..... 27
90.Records of Explosives 27
91. Traffic Diversion 27
92. Social Security Fund…….……..91

Section VII: General Conditions of Contract

Sisn Rural Municipality Office, Rukum East

NCB/SRM/WORKS-04/083/084

General Conditions of Contract

This Section provides the General Conditions of Contract that will apply to the Contract for which the Biding document is issued.

General	
1. Definitions	1.1 Boldface type is used to identify defined terms. (a) The **Accepted Contract Amount** means the amount accepted in the Letter of Acceptance for the execution and completion of the Works and the remedying of any defects. (b) The **Activity Schedule** is a schedule of the activities comprising the construction, installation, testing, and commissioning of the Works in a lump sum contract. It includes a lump sum price for each activity, which is used for valuations and for assessing the effects of Variations and Compensation Events. (c) **Bill of Quantities** means the priced and completed Bill of Quantities forming part of the Bid. (d) **Compensation Events** are those defined in GCC 50 hereunder. (e) The **Completion Date** is the date of completion of the Works as certified by the Project Manager, in accordance with GCC 68.1. (f) The **Contract** is the Contract between the Employer and the Contractor to execute, complete, and maintain the Works. It consists of the documents listed in GCC 2.3 below. (g)The **Contractor** is the party whose Bid to carry out the Works has been accepted by the Employer. (h)The **Contractor's Bid** is the completed bidding document submitted by the Contractor to the Employer. (i)The **Contract Price** is the Accepted Contract Amount stated in the Letter of Acceptance and thereafter as adjusted in accordance with the Contract. (j) **Days** are calendar days; months are calendar-months. (k) **Dayworks** are varied work inputs subject to payment on a time basis for the Contractor's employees and Equipment, in addition to payments for associated Materials and Plant. (l) A **Defect** is any part of the Works not completed in accordance with the Contract. (m) The **Defects Liability Certificate** is the certificate issued by Project Manager upon correction of defects by the Contractor. (n) The **Defects Liability Period** is the period calculated from the Completion Date where the Contractor remains responsible for remedying defects. (o) **Drawings** include calculations and other information provided or approved by the Project Manager for the execution of the Contract. (p) The **Employer** is the party who employs the Contractor to carry out the Works, as **specified in the SCC**. (q) **Equipment** is the Contractor's machinery and vehicles brought temporarily to the Site to construct the Works. (r) **Force Majeure** means an exceptional event or circumstance: which is beyond a Party's control; which such Party could not reasonably have provided against before entering into the Contract; which, having arisen, such Party could not reasonably have avoided or overcome; and, which is not substantially attributable to the other Party. (s) The **Initial Contract Price** is the Contract Price listed in the Employer's Letter of Acceptance. (t) **In writing** or **written** means hand written, type written, printed or electronically made, and resulting in permanent record.

	(u) The **Intended Completion Date** is the date on which it is intended that the Contractor shall complete the Works. The Intended Completion Date is **specified in the SCC**. The Intended Completion Date may be revised only by the Project Manager by issuing an extension of time or an acceleration order. (v) **Letter of Acceptance** means the formal acceptance by the Employer of the Bid and denotes the formation of the contract at the date of acceptance. (w) **Materials** are all supplies, including consumables, used by the Contractor for incorporation in the Works. (x) **Party** means the Employer or the Contractor, as the context requires. (y) **SCC** means Special Conditions of Contract (aa) **Plant** is any integral part of the Works that shall have a mechanical, electrical, chemical, or biological function. (bb) The **Project Manager** is the person **named in the SCC** (or any other competent person appointed by the Employer and notified to the Contractor, to act in replacement of the Project Manager) who is responsible for supervising the execution of the Works and administering the Contract. (cc) **Retention Money** means the aggregate of all monies retained by the Employer pursuant to GCC 54.1. (dd) **Schedules** means the document(s) entitled schedules, completed by the Contractor and submitted with the Letter of Bids, as included in the Contract. Such document may include the Bill of Quantities, data, lists, and schedules of rates and/or prices. (ee) The **Site** is the area defined **as such in the SCC.** (ff) **Site Investigation Reports** are those that were included in the bidding documents and are factual and interpretative reports about the surface and subsurface conditions at the Site. (gg) **Specification** means the Specification of the Works included in the Contract and any modification or addition made or approved by the Project Manager. (hh) The **Start Date** is given i**n the SCC**. It is the latest date when the Contractor shall commence execution of the Works. It does not necessarily coincide with any of the Site Possession Dates. (ii) A **Subcontractor** is a person or corporate body who has a Contract with the Contractor to carry out a part of the work in the Contract, which includes work on the Site. (jj) **Temporary Works** are works designed, constructed, installed, and removed by the Contractor that are needed for construction or installation of the Works. (kk) A **Variation** is an instruction given by the Project Manager which varies the Works (ll) The **Works** are what the Contract requires the Contractor to construct, install, and turn over to the Employer, as **defined in the SCC**.
2. Interpretation	2.1 In interpreting these GCC, singular also means plural, male also means female or neuter, and the other way around. Headings have no significance. Words have their normal meaning under the language of the Contract unless specifically defined. The Project Manager shall provide instructions clarifying queries about these GCC.
	2.2 If sectional completion is **specified in the SCC**, references in the GCC to the Works, the Completion Date, and the Intended Completion Date apply to any Section of the Works (other than references to the Completion Date and Intended Completion Date for the whole of the Works).
	2.3 The documents forming the Contract shall be interpreted in the following order of priority: (a) Contract Agreement, (b) Letter of Acceptance,

	(c) Letter of Bid, (d) Special Conditions of Contract, (e) General Conditions of Contract, (f) Specifications, (g) Drawings, (h) Bill of Quantities (or Schedules of Prices for lump sum contracts), and (i) Any other document **listed in the SCC** as forming part of the Contract.
3. Language and Law	3.1 The language of the Contract and the law governing the Contract are **stated in the SCC**.
	3.2 Throughout the execution of the Contract, the Contractor shall comply with the import of goods and services prohibitions in the Employer's country when (a) by an act of compliance with a decision of the United Nations Security Council taken under Chapter VII of the Charter of the United Nations, the Employer's Country prohibits any import of goods from, or any payments to, a particular country, person, or entity. Where the Employer's country prohibits payments to a particular firm or for particular goods by such an act of compliance, that firm may be excluded.
4.Contract Agreement	4.1 The Parties shall enter into a Contract Agreement within 15 days after the Contractor receives the Letter of Acceptance, unless the Special Conditions establish otherwise. The Contract Agreement shall be based upon the attached Contract forms in Section IX.
	4.2 Without altering the basic nature or scope of work, the contract may be amended upon mutual written consent as per prevailing Public Procurement Law.
5. Assignment	5.1 Neither Party shall assign the whole or any part of the Contract or any benefit or interest in or under the Contract. However, either Party (a) may assign the whole or any part with the prior agreement of the other Party, at the sole discretion of such other Party; and (b) may, as security in favor of a bank or financial institution, assign its right to any moneys due, or to become due, under the Contract.
6. Care and Supply of Documents	6.1 The Specification and Drawings shall be in the custody and care of the Employer. Unless otherwise stated in the Contract, one copy of the Contract and of each subsequent Drawing shall be supplied to the Contractor, who may make or request further copies at the cost of the Contractor.
	6.2 Each of the Contractor's Documents shall be in the custody and care of the Contractor, unless and until taken over by the Employer. Unless otherwise stated in the Contract, the Contractor shall supply to the Engineer six copies of each of the Contractor's Documents.
	6.3 The Contractor shall keep, on the Site, a copy of the Contract, publications named in the Specification, the Contractor's Documents (if any), the Drawings and Variations and other communications given under the Contract. The Employer's Personnel shall have the right of access to all these documents at all reasonable times.
	6.4 If a Party becomes aware of an error or defect in a document which was prepared for use in executing the Works, the Party shall promptly give notice to the other Party of such error or defect.
7. Confidential Details	7.1 The Contractor's and the Employer's Personnel shall disclose all such confidential and other information as may be reasonably required in order to verify the Contractor's compliance with the Contract and allow its proper implementation.
	7.2 Each of them shall treat the details of the Contract as private and confidential, except to the extent necessary to carry out their respective obligations under the Contract or to comply with applicable Laws. Each of them shall not publish or disclose any particulars of the Works prepared by the other Party without the previous agreement of the other Party. However, the Contractor shall be permitted to disclose any publicly

	available information, or information otherwise required to establish his qualifications to compete for other projects.
	7.3 Notwithstanding the above, the Contractor may furnish to its Subcontractor(s) such documents, data and other information it receives from the Employer to the extent required for the Subcontractor(s) to perform its work under the Contract, in which event the Contractor shall obtain from such Subcontractor(s) an undertaking of confidentiality similar to that imposed on the Contractor under this Clause.
8. Compliance with Laws	8.1 The Contractor shall, in performing the Contract, comply with applicable Laws of Nepal.
9. Joint and Several Liability	9.1 If the Contractor is a joint venture of two or more entities , all such entities shall be jointly and severally liable to the Employer for the fulfillment of the provisions of the Contract, and shall designate one of such persons to act as a leader with authority to bind the joint venture. **The contractor shall not handover the responsibility of the contract to any one member or some members of Joint Venture or any other parties, not involved in the contract.** The composition or the constitution of the joint venture shall not be altered without the prior consent of the Employer.
10. Project Manager's Decisions	10.1 Except where otherwise specifically stated, the Project Manager shall decide contractual matters between the Employer and the Contractor in the role representing the Employer.
11. Delegation	11.1 The Project Manager may delegate any of his duties and responsibilities to other people after notifying the Contractor, and may cancel any delegation after notifying the Contractor.
12. Communications	12.1 Communications between parties that are referred to in the Conditions shall be effective only when in writing. Wherever these Conditions provide for the giving or issuing of approvals, certificates, consents, determinations, notices and requests, these communications shall be: (a) in writing and delivered by hand (against receipt), sent by mail or courier, or transmitted using any of the agreed systems of electronic transmission as **stated in the SCC**; and (b) delivered, sent or transmitted to the address for the recipient's communications as stated in the Contract. However: (i) if the recipient gives notice of another address, communications shall thereafter be delivered accordingly; and (ii) if the recipient has not stated otherwise when requesting an approval or consent, it may be sent to the address from which the request was issued. Approvals, certificates, consents and determinations shall not be unreasonably withheld or delayed.
	12.2 A Notice shall be effective when delivered or on the Notice's effective date, whichever is later.
13. Subcontracting	13.1 **For GON Funded:** A list of approved Subcontractors including its value/works is included as Article 2 (k) of contract Agreement. Approval by the Employer for any of the Subcontractors shall not relieve the Contractor from any of its obligations, duties, or responsibilities under the contract. **For DP Funded:** The Contractor may subcontract with the approval of the Project Manager, but may not assign the Contract without the approval of the Employer in writing.

	Subcontracting shall not alter the Contractor's obligations. Bidders may propose subcontracting up to the percentage of total value of contracts as specified in the SCC. The Sub contractor shall meet the qualification requirement as specified **in SCC.** 13.2 The contractor shall give prior notice to the Employer clearly specifying the nature, scope, and responsibilities of the work to be performed, to engage other subcontractors, material suppliers, equipment suppliers, service providers, or other persons or entities during the implementation of the contract. 13.3 Before notifying the Employer as per GCC 13.2, the contractor shall enter into a written agreement with the subcontractor, material suppliers, equipment suppliers, service providers, or other persons or entities clearly specifying the scope of work, responsibilities, quality requirements, duration, payment terms, security, labor-related obligations, and conditions relating to performance of the work. 13.3 Any subcontracting arrangement made in accordance with GCC 13.2 shall not relieve the Contractor of any of its obligations or liabilities under the Contract. 13.4 The contractor shall provide the Employer with details of the payments made to the subcontractor, material suppliers, equipment suppliers, service providers, or other persons or entities engaged under GCC 13.1 and/or GCC 13.2. 13.5 If the contractor is found not to have made payment to the subcontractor, material suppliers, equipment suppliers, service providers, or other persons or entities engaged under GCC 13.1 and/or GCC 13.2 in accordance with the terms of the agreement, the Employer may determine the amount payable to such subcontractor, material suppliers, equipment suppliers, service providers, or other persons or entities and make payment to them from any remaining dues to be paid to the contractor, retention money, or forfeited performance security.
14. Other Contractors	14.1 The Contractor shall cooperate and share the Site with other contractors, public authorities, utilities, and the Employer between the dates given in the Schedule of Other Contractors, **as referred to in the SCC**. The Contractor shall also provide facilities and services for them as described in the Schedule. The Employer may modify the Schedule of Other Contractors, and shall notify the Contractor of any such modification
15 Personnel and Equipment	15.1 The Contractor shall employ the key personnel and use the equipment identified in its Bid to carry out the Works, or other personnel and equipment approved by the Project Manager. The Project Manager shall approve any proposed replacement of key personnel and equipment only if their relevant qualifications or characteristics are substantially equal to or better than those proposed in the Bid.
	15.2 If the Project Manager asks the Contractor to remove a person who is a member of the Contractor's staff or work force, stating the reasons, the Contractor shall ensure that the person leaves the Site within seven days and has no further connection with the work in the Contract.
	15.3 If the Employer, Project Manager, or Contractor determines, that any employee of the Contractor be determined to have engaged in corrupt, fraudulent, collusive, coercive, or other prohibited practices during the execution of the Works, then that employee shall be removed in accordance with Clause 15.2 above.
16. Employer's and Contractor's Risk	16.1 The Employer carries the risks which this Contract states are Employer's risks, and the Contractor carries the risks which this Contract states are Contractor's risks.
17. Employer's	17.1 From the Start Date until the Defects Liability Certificate has been issued, the

Risks	following are Employer's risks: (a) The risk of personal injury, death, or loss of or damage to property (excluding the Works, Plant, Materials, and Equipment), which are due to (i) use or occupation of the Site by the Works or for the purpose of the Works, which is the unavoidable result of the Works or (ii) negligence, breach of statutory duty, or interference with any legal right by the Employer or by any person employed by or contracted to him except the Contractor. (b) The risk of damage to the Works, Plant, Materials, and Equipment to the extent that it is due to a fault of the Employer or in the Employer's design, or due to war or radioactive contamination directly affecting the country where the Works are to be executed.
	17.2 From the Completion Date until the Defects Liability Certificate has been issued, the risk of loss of or damage to the Works, Plant, and Materials is an Employer's risk except loss or damage due to (a) a Defect which existed on the Completion Date, (b) an event occurring before the Completion Date, which was not itself an Employer's risk, or (c) the activities of the Contractor on the Site after the Completion Date.
18. Contractor's Risks	18.1 From the Starting Date until the Defects Liability Certificate has been issued, the risks of personal injury, death, and loss of or damage to property (including, without limitation, the Works, Plant, Materials, and Equipment) which are not Employer's risks are Contractor's risks.
19. Insurance	19.1 The Contractor shall provide insurance in the joint names of the Employer and the Contractor from the Start Date to the end of the Defects Liability Period, in the amounts and deductibles **stated in the SCC** for the following events which are due to the Contractor's risks: (a) loss of or damage to the Works, Plant, and Materials; (b) loss of or damage to Equipment; (c) loss of or damage to property (except the Works, Plant, Materials, and Equipment) in connection with the Contract; and (d) Personal injury or death.
	19.2 Policies and certificates for insurance shall be delivered by the Contractor to the Project Manager for the Project Manager's approval before the Start Date. All such insurance shall provide for compensation to be payable in the proportions of Nepalese Rupees required to rectify the loss or damage incurred.
	19.3 If the Contractor does not provide any of the policies and certificates required, the Employer may affect the insurance which the Contractor should have provided and recover the premiums the Employer has paid from payments otherwise due to the Contractor or, if no payment is due, the payment of the premiums shall be a debt due.
	19.4 Alterations to the terms of insurance shall not be made without the approval of the Project Manager.
	19.5 Both parties shall comply with any conditions of the insurance policies.
20. Site Investigation Reports	20.1 The Contractor, in preparing the Bid, shall rely on any Site Investigation Reports referred to **in the SCC**, supplemented by any information available to the Contractor.
21. Contractor to Construct the Works	21.1 The Contractor shall construct and install the Works in accordance with the Specifications and Drawings.
22. The Works to	22.1 The Contractor may commence execution of the Works on the Start Date and shall

Be Completed within intended Completion Date	carry out the Works in accordance with the Program submitted by the Contractor, as updated with the approval of the Project Manager, and complete them within the intended Completion Date.
23. Design by contractor and Approval by the Project Manager	23.1 The contractor shall be responsible for the design of permanent works as **specified in SCC**.
	23.2 Contractor shall be responsible for design of the Temporary Works. The Contractor shall submit Specifications and Drawings showing the proposed Temporary Works to the Project Manager, for his approval.
	23.3 All Drawings prepared by the Contractor for the execution of the temporary or permanent Works, shall be subject to prior approval by the Project Manager before their use.
	23.4 The Project Manager's approval shall not alter the Contractor's responsibility for design of temporary works.
24. Safety, Security and Protection of the Environment	24.1 The Contractor shall, throughout the execution, and completion of the works and remedying of any defects therein: a. Have full regard for the safety of all persons entitled to be upon the site and keep the site (so as the same is under his control) and the works (so far as the same are not completed or occupied by the Employer) in an orderly state appropriate to the avoidance of danger to such persons. b. Provide and maintain at his own cost all lights, guards, fencing, warning signs and watching, when necessary or required by the Project Manager or by any duly constituted authority, for the protection of the Works of for the safety and convenience of the public or others. c. Take all reasonable steps to protect the environment on and off the site and to avoid damage or nuisance to persons or to property of the public or others resulting from pollution, noise or other causes arising as a consequence of his methods of operation. d. Ensure that any cut or fill slopes are planted in grass or other plant cover as soon as possible to protect them from erosion. e. Any spoil or material removed from drains shall be disposed of to designated stable tipping areas as directed by the Project Manager. f. Shall not use fuel wood as a means of heating during the processing or preparation of any materials forming part of the works. g. The Project Manager shall have the power to disallow any working practice or activity of the Contractor or direct that such practices or activities be modified should the Project Manager consider, on the advice of the relevant Government Departments, that the practices or activities will be harmful to wildlife. h. Provide on the Site such lifesaving apparatus as may be appropriate and an adequate and easily accessible first aid outfit or such outfits as may be required by any government ordinance, factory act, etc., subsequently published and amended from time to time.
	24.2 The Contractor shall comply with the Employer's Occupational Health and Safety (OHS) Policy, Guideline and/or Operating Manual, if any, **as specified in the SCC.**
25. Discoveries	25.1 Anything of historical or other interest or of significant value unexpectedly discovered on the Site shall be the property of the employer. The Contractor shall notify the Project Manager of such discoveries and carry out the Project Manager's instructions for dealing

	with them.
26. Possession of the Site	26.1 The Employer shall give possession of all parts of the Site to the Contractor. If possession of a part is not given by the date **stated in the SCC**, the Employer shall be deemed to have delayed the start of the relevant activities, and this shall be a Compensation Event.
27. Access to the Site	27.1 The Contractor shall allow the Project Manager and any person authorized by the Project Manager access to the Site and to any place where work in connection with the Contract is being carried out or is intended to be carried out.
28.Instructions, Inspections and Audits	28.1 The Contractor shall carry out all instructions of the Project Manager which comply with the applicable laws where the Site is located.
	28.2 The Contractor shall keep, and shall make all reasonable efforts to cause its Subcontractors and sub consultants to keep accurate and systematic accounts and records in respect of the Works in such form and details as will clearly identify relevant time changes and costs.
	28.3 The Contractor shall permit the GoN/DP and/or persons appointed by the GoN/DP to inspect the Site and/or the accounts and records of the Contractor and its sub-contractors relating to the performance of the Contract, and to have such accounts and records audited by auditors appointed by the GoN/DP if required by the GoN/DP. The Contractor's attention is drawn to Sub-Clause 73.2 which provides, inter alia, that acts intended to materially impede the exercise of the GoN's/DP's inspection and audit rights provided for under this Sub-Clause constitute a obstructive practice subject to contract termination.
29.Dispute Settlement	29.1 The Employer and the Contractor shall attempt to settle amicably by direct negotiation any disagreement or dispute arising between them under or in connection with the Contract.
	29.2 Any dispute between the Parties as to matters arising pursuant to this Contract which cannot be settled amicably within thirty (30) days after receipt by one Party of the other Party's request for such amicable settlement may be referred to Arbitration within 30 days after the expiration of amicable settlement period.
30. Procedures for Disputes	30.1 In case of arbitration, the arbitration shall be conducted in accordance with procedures in accordance with law of Nepal at the place **given in the SCC**.
B. Staff and Labor	
31. Forced Labor	31.1 The Contractor shall not employ forced labor, which consists of any work or service, not voluntarily performed, that is exacted from an individual under threat of force or penalty. This covers any kind of involuntary or compulsory labor, such as indentured labor, bonded labor, or similar labor–contracting arrangements.
32. Child Labor	32.1 The Contractor shall not employ children in a manner that is economically exploitative, or is likely to be hazardous, or to interfere with, the child's education, or to be harmful to the child's health or physical, mental, spiritual, moral, or social development. Where national laws have provisions for employment of minors, the Contractor shall follow those laws applicable to the Contractor. Children below the age of 18 years shall not be employed in dangerous work.
33.Non-discrimination and Equal Opportunity	33.1 The Contractor shall not make employment decisions on the basis of personal characteristics unrelated to inherent job requirements. The Contractor shall base the employment relationship on the principle of equal opportunity and fair treatment, and shall not discriminate with respect to aspects of the employment relationship, including recruitment and hiring, compensation (including wages and benefits), working conditions and terms of employment, access to training, promotion, termination of employment or retirement, and discipline. In countries where national law provides for non-discrimination in employment, the Contractor shall comply with

	national law. When national laws are silent on nondiscrimination in employment, the Contractor shall meet this Sub clause's requirements. Special measures of protection or assistance to remedy past discrimination or selection for a particular job based on the inherent requirements of the job shall not be deemed discrimination.
B1. Time Control	
34. Program	34.1 Within the time **stated in the SCC**, after the date of the Letter of Acceptance, the Contractor shall submit to the Project Manager for approval a Program showing the general methods, arrangements, order, and timing for all the activities in the Works. In the case of a lump sum contract, the activities in the Program shall be consistent with those in the Activity Schedule.
	34.2 An update of the Program shall be a program showing the actual progress achieved on each activity and the effect of the progress achieved on the timing of the remaining work, including any changes to the sequence of the activities.
	34.3 The Contractor shall submit to the Project Manager for approval an updated Program at intervals no longer than the period **stated in the SCC**. If the Contractor does not submit an updated Program within this period, the Project Manager may withhold the amount stated in the SCC from the next payment certificate and continue to withhold this amount until the next payment after the date on which the overdue Program has been submitted. In the case of a lump sum contract, the Contractor shall Provide an updated Activity Schedule within 15 days of being instructed to by the Project Manager.
	34.4 The Project Manager's approval of the Program shall not alter the Contractor's obligations. The Contractor may revise the Program and submit it to the Project Manager again at any time. A revised Program shall show the effect of Variations and Compensation Events.
35. Extension of the Intended Completion Date	35.1 The Project Manager shall extend the Intended Completion Date if a Compensation Event occurs or a Variation is issued which makes it impossible for Completion to be achieved by the Intended Completion Date without the Contractor taking steps to accelerate the remaining work, which would cause the Contractor to incur additional cost.
	35.2 The Project Manager shall decide whether and by how much to extend the Intended Completion Date within 21 days of the Contractor asking the Project Manager for a decision upon the effect of a Compensation Event or Variation and submitting full supporting information at least 21 days prior to the intended completion date. If the Contractor has failed to give early warning of a delay or has failed to cooperate in dealing with a delay, the delay by this failure shall not be considered in assessing the new Intended Completion Date. Along with full supporting information, the contractor shall also submit a revised work schedule and ensure that the Performance Security, Insurance, and Advance Payment Security remain valid. Within fifteen (15) days of the receipt of Letter of Extension of Intended Completion Date from the Employer, the contractor shall submit Performance Security, Advanced Payment Guarantee (if any) and Insurance Policy documents as required with extended validity.
	35.3 If the contractor fails to submit Performance Security, Advanced Payment Guarantee (if any) and Insurance Policy documents, as required with extended validity within the prescribed time as per ITB 35.2, the Contractor shall pay fine at the rate of 0.01% of the final contract price (without VAT but including PS) per day for a maximum of fifteen (15) days. The Employer may deduct the fine from payments due to the Contractor.
36. Acceleration	36.1 When the Employer wants the Contractor to finish before the Intended Completion Date, the Project Manager shall obtain priced proposals for achieving the necessary

	acceleration from the Contractor. If the Employer accepts these proposals, the Intended Completion Date shall be adjusted accordingly and confirmed by both the Employer and the Contractor.
	36.2 If the Contractor's priced proposals for acceleration are accepted by the Employer, they are incorporated in the Contract Price and treated as a Variation.
37. Delays Ordered by the Project Manager	37.1 The Project Manager may instruct the Contractor to delay the start or progress of any activity within the Works.
38.Management Meetings	38.1 Either the Project Manager or the Contractor may require the other to attend a management meeting. The business of a management meeting shall be to review the plans for remaining work and to deal with matters raised in accordance with the early warning procedure.
	38.2 The Project Manager shall record the business of management meetings and provide copies of the record to those attending the meeting and to the Employer. The responsibility of the parties for actions to be taken shall be decided by the Project Manager either at the management meeting or after the management meeting and stated in writing to all who attended the meeting.
39. Early Warning	39.1 The Contractor shall warn the Project Manager at the earliest opportunity of specific likely future events or circumstances that may adversely affect the quality of the work, increase the Contract Price, or delay the execution of the Works. The Project Manager may require the Contractor to provide an estimate of the expected effect of the future event or circumstance on the Contract Price and Completion Date. The estimate shall be provided by the Contractor as soon as reasonably possible.
	39.2 The Contractor shall cooperate with the Project Manager in making and considering proposals for how the effect of such an event or circumstance can be avoided or reduced by anyone involved in the work and in carrying out any resulting instruction of the Project Manager.
C. Quality Control	
40. Identifying Defects	40.1 The Project Manager shall check the Contractor's work and notify the Contractor of any Defects that are found. Such checking shall not affect the Contractor's responsibilities. The Project Manager may instruct the Contractor to search for a Defect and to uncover and test any work that the Project Manager considers may have a Defect.
41. Tests	41.1 If the Project Manager instructs the Contractor to carry out a test not specified in the Specification to check whether any work has a Defect and the test shows that it does, the Contractor shall pay for the test and any samples. If there is no Defect, the test shall be a Compensation Event.
42.Correction of Defects	42.1 The Project Manager shall give notice to the Contractor of any Defects before the end of the Defects Liability Period, which begins at issuance of taking over certificate pursuant to GCC clause 69.2, and is **defined in the SCC**. The Defects Liability Period shall be extended for as long as Defects remain to be corrected.
	42.2 Every time notice of a Defect is given, the Contractor shall correct the notified Defect within the length of time specified by the Project Manager's notice.
43.Uncorrected Defects	43.1 If the Contractor has not corrected a Defect within the time specified in the Project Manager's notice, the Project Manager shall assess the cost of having the Defect corrected, and the Contractor shall pay this amount.
D. Cost Control	
44. Contract Price	44.1 In the case of a Unit Rate contract, the Bill of Quantities shall contain priced items for the Works to be performed by the Contractor. The Bill of Quantities is used to

	calculate the Contract Price. The Contractor will be paid for the quantity of the work accomplished at the rate in the Bill of Quantities for each item.
	44.2 In the case of a lump sum contract, the Activity Schedule shall contain the priced activities for the Works to be performed by the Contractor. The Activity Schedule is used to monitor and control the performance of activities on which basis the Contractor will be paid. If payment for Materials on Site shall be made separately, the Contractor shall show delivery of Materials to the Site separately on the Activity Schedule.
45. Changes in the Contract Price	45.1 In the case of an Unit Rate contract: (a) If the final quantity of the work done differs from the quantity in the Bill of Quantities for the particular item by more than 25 percent, provided the change exceeds 2 percent of the Initial Contract Price, the Project Manager shall adjust the rate to allow for the change. (b) If requested by the Project Manager, the Contractor shall provide the Project Manager with a detailed cost breakdown of any rate in the Bill of Quantities.
	45.2 In the case of a lump sum contract, the Activity Schedule shall be amended by the Contractor to accommodate changes of Program or method of working made at the Contractor's own discretion. Prices in the Activity Schedule shall not be altered when the Contractor makes such changes to the Activity Schedule.
46. Variations	46.1 All Variations shall be included in updated Programs, and, in the case of a lump sum contract, also in the Activity Schedule, produced by the Contractor.
	46.2 The Contractor shall provide the Project Manager with a quotation for carrying out the Variation when requested to do so by the Project Manager. The Project Manager shall assess the quotation, which shall be given within seven (7) days of the request or within any longer period stated by the Project Manager and before the Variation is ordered.
	46.3 If the Contractor's quotation is unreasonable, the Project Manager may order the Variation and make a change to the Contract Price, which shall be based on the Project Manager's own forecast of the effects of the Variation on the Contractor's costs.
	46.4 If the Project Manager decides that the urgency of varying the work would prevent a quotation being given and considered without delaying the work, no quotation shall be given and the Variation shall be treated as a Compensation Event.
	46.5 The Contractor shall not be entitled to additional payment for costs that could have been avoided by giving early warning.
	46.6 In the case of an Unit Rate contract, if the work in the Variation corresponds to an item description in the Bill of Quantities and if, in the opinion of the Project Manager, the quantity of work above the limit stated in **GCC 45.1** or the timing of its execution do not cause the cost per unit of quantity to change, the rate in the Bill of Quantities shall be used to calculate the value of the Variation. If the cost per unit of quantity changes, or if the nature or timing of the work in the Variation does not correspond with items in the Bill of Quantities, the quotation by the Contractor shall be in the form of new rates for the relevant items of work.
47.Cash Flow Forecasts	47.1 When the Program, or, in the case of a lump sum contract, the Activity Schedule, is updated, the Contractor shall provide the Project Manager with an updated cash flow forecast.
48.Payment Certificates	48.1 The Contractor shall submit to the Project Manager monthly statements of the estimated value of the work executed less the cumulative amount certified previously.
	48.2 The Project Manager shall check the Contractor's monthly statement and certify the amount to be paid to the Contractor within 30 days of submission by contractor.

	48.3 The value of work executed shall be determined by the Project Manager.
	48.4 The value of work executed shall comprise: (a) In the case of an Unit Rate contract, the value of the quantities of work in the Bill of Quantities that have been completed; or (b) In the case of a lump sum contract, the value of work executed shall comprise the value of completed activities in the Activity Schedule.
	48.5 The value of work executed shall include the valuation of Variations and Compensation Events.
	48.6 The Project Manager may exclude any item certified in a previous certificate or reduce the proportion of any item previously certified in any certificate in the light of later information.
49. Payments	49.1 Payments shall be adjusted for deductions for advance payments and retention. The Employer shall pay the Contractor the amounts certified by the Project Manager within 30 days of the date of each certificate. If the Employer makes a late payment, the Contractor shall be paid interest as **indicated in the SCC** on the late payment in the next payment. Interest shall be calculated from the date by which the payment should have been made up to the date when the late payment is made.
	49.2 If an amount certified is increased in a later certificate or as a result of an award by an Arbitrator, the Contractor shall be paid interest upon the delayed payment as set out in this clause. Interest shall be calculated from the date upon which the increased amount would have been certified in the absence of dispute.
	49.3 Items of the Works for which no rate or price has been entered in BOQ shall not be paid for by the Employer and shall be deemed covered by other rates and prices in the Contract.
50.Compensation Events	50.1 The following shall be Compensation Events: (a) The Employer does not give access to a part of the Site by the Site Possession Date pursuant to GCC 26.1. (b) The Employer modifies the Schedule of Other Contractors in a way that affects the work of the Contractor under the Contract. (c) The Project Manager orders a delay or does not issue Drawings, Specifications, or instructions required for execution of the Works on time. (d) The Project Manager instructs the Contractor to uncover or to carry out additional tests upon work, which is then found to have no Defects. (e) The Project Manager unreasonably does not approve a subcontract to be let. (f) Ground conditions are substantially more adverse than could reasonably have been assumed before issuance of the Letter of Acceptance from the information issued to bidders (including the Site Investigation Reports), from information available publicly and from a visual inspection of the Site. (g) The Project Manager gives an instruction for dealing with an unforeseen condition, caused by the Employer, or additional work required for safety or other reasons. (h) Other contractors, public authorities, utilities, or the Employer does not work within the dates and other constraints stated in the Contract, and they cause delay or extra cost to the Contractor. (i) The advance payment is delayed. (j) The effects on the Contractor of any of the Employer's Risks. (k) The Project Manager unreasonably delays issuing a Certificate of Completion.
	50.2 If a Compensation Event would cause additional cost or would prevent the work being completed before the Intended Completion Date, the Contract Price shall be increased and/or the Intended Completion Date shall be extended. The Project Manager shall decide

	whether and by how much the Contract Price shall be increased and whether and by how much the Intended Completion Date shall be extended.
	50.3 As soon as information demonstrating effect of each Compensation Event upon the Contractor's forecast cost has been provided by the Contractor, it shall be assessed by the Project Manager, and the Contract Price shall be adjusted accordingly. If the Contractor's forecast is deemed unreasonable, the Project Manager shall adjust the Contract Price based on the Project Manager's own forecast. The Project Manager shall assume that the Contractor shall react competently and promptly to the event.
	50.4 The Contractor shall not be entitled to compensation to the extent that the Employer's interests are adversely affected by the Contractor's not having given early warning or not having cooperated with the Project Manager.
51. Tax	51.1 The Project Manager shall adjust the Contract Price if taxes, duties, and other levies are changed between the date 30 days before the submission of bids for the Contract and the date of the last Completion certificate. The adjustment shall be the change in the amount of tax payable by the Contractor, provided such changes are not already reflected in the Contract Price or are a result of GCC 53.
52. Currency	52.1 The currency of Contracts shall be Nepalese Rupees.
53.Price Adjustment	53.1 Prices shall be adjusted for fluctuations in the cost of inputs only if **provided for in the SCC**. If so provided, the amounts certified in each payment certificate, before deducting for Advance Payment, shall be adjusted by applying the respective price adjustment factor to the payment amounts due.
	53.2 Adjustment Formulae[7]: The formulae will be of the following general type: $pn = A + b\frac{Ln}{Lo} + c\frac{Mn}{Mo} + d\frac{En}{Eo} + etc.$ Where: *pn* is a price adjustment factor to be applied to the amount for the payment of the work carried out in the subject month, determined in accordance with Clause 49; *A* is a constant, specified in the Bidding Forms- Table of Price Adjustment data, representing the nonadjustable portion in contractual payments;[8]b, c, d, etc., coefficients representing the estimated proportion of each cost element (labor, materials, equipment usage, etc.) in the Works or sections thereof, net of Provisional Sums, **as specified in the SCC;** *Ln, Mn, En,* etc., are the current cost indices or reference prices of the cost elements for month "n," determined pursuant to Sub-Clause 53.4, applicable to each cost element; and *Lo, Mo, Eo,* etc., are the base cost indices or reference prices corresponding to the above cost elements at the date specified in Sub-Clause 53.4
	53.3 Sources of Indices and Weightings: The sources of indices shall be those listed in the Bidding Forms- Table of Price Adjustment data, as approved by the Project Manager and stated in SCC. Indices shall be appropriate for their purpose and shall relate to the Contractor's proposed source of supply of inputs on the basis of which his Contract shall have been computed. As the proposed basis for price adjustment, the Contractor shall have submitted with his bid the tabulation of Weightings and Source of Indices in the Bidding Forms, which shall be subject to approval by the Project Manager.

	53.4 Base, Current and Provisional Indices: The base cost indices or prices shall be those prevailing on the day 30 days prior to the latest date for submission of bids. Current indices or prices shall be those prevailing on the day 30 days prior to the last day of the period to which a particular Interim Payment Certificate is related. If at any time the current indices are not available, provisional indices as determined by the Project Manager will be used, subject to subsequent correction of the amounts paid to the Contractor when the current indices become available.
	53.5 Weightings: The weightings for each of the factors of cost given in the Bidding Forms shall be adjusted if, in the opinion of the Project Manager, they have been rendered unreasonable, unbalanced or inapplicable as a result of varied or additional work already executed or instructed under Clause 46 or for any other reason.
	53.6 Where, price adjustment provision is not applicable pursuant to Sub-clause 53.1 then the Contract is subject to price adjustment only for construction material in accordance with this clause. If the prices of the construction materials stated in the contract is increased or decreased in an unexpected manner in excess of ten (10%) percent in comparison to the base price construction material stated in Section –IV, Bidding Forms-Table of Price Adjustment Data, then the price adjustment for the increase or decrease of price of the construction material beyond 10% shall be made by applying the following formulas: For unexpected increase in price $P = [R_1 - (R_0 \times 1.10)] \times Q$ For unexpected decrease in price P $= [R_1 - (R_0 \times 0.90)] \times Q$ Where: "P" is price adjustment amount "R_1" is the present price of the construction material (Source of indices shall be those listed in the Bidding forms) "R_0" is the base price of the construction material "Q" is quantity of the construction material consumed in construction during the period of price adjustment consideration If the Base price and source is to be proposed by the Bidder as per the provision made in Section –IV, Bidding Forms-Table of Price Adjustment Data then the Base price and source filled by Bidder for the construction material stated in the Bidding Form shall be subject to the approval of the Project manager and shall be as **stated in SCC**..
	53.7 The Price Adjustment amount shall be limited to a maximum of the initial Contract Amount **as specified in the SCC**.
	53.8 The Price Adjustment provision shall not be applicable for delayed period if the contract is not completed in time due to the delay caused by the contractor or the contract is a Lump sum Contract.
54. Retention	54.1 The Employer shall retain from each payment due to theContractor the proportion **stated in the SCC** until Completion of the whole of the Works.
	54.2 Upon the issue of a Defects Liability Certificate by the Project Manager, in accordance with GCC 70.1, half the total amount retained shall be repaid to the Contractor and half when the Contractor has submitted the evidence of submission of tax return to the concerned Internal Revenue Office.
	54.3 The Contractor may substitute retention money with an unconditional bank guarantee issued from Commercial Bank or Financial Institution eligible to issue Bank Guarantee as per prevailing Law if: (a) at least eighty (80) percent of the whole works have been completed, (b) progress of the works is satisfactory in accordance with the Contract as per

	approved work schedule, and (c) it can be assured that the works can be completed at the intended completion date. The validity of the bank guarantee under this sub-clause shall be at least 30 days beyond the end of Defect Liability Period.
	54.4 If retention money is substituted by bank guarantee in accordance with clause 54.3, the bank guarantee shall be submitted either using the Retention Money Security Form included in Section X (Contract Forms) or in another Form acceptable to the employer. The validity of the bank guarantee shall be at least one month more than the end of defect liability period.
55.Liquidated Damages	55.1 The Contractor shall pay liquidated damages to the Employer at the rate per day **stated in the SCC** for each day that the Completion Date is later than the Intended Completion Date. The total amount of liquidated damages shall not exceed the amount **defined in the SCC**. The Employer may deduct liquidated damages from payments due to the Contractor. Payment of liquidated damages shall not affect the Contractor's liabilities.
	55.2 If the Intended Completion Date is extended after liquidated damages have been paid, the Project Manager shall correct any overpayment of liquidated damages by the Contractor by adjusting the next payment certificate. The Contractor shall be paid interest on the overpayment, calculated from the date of payment to the date of repayment, at the rates specified in GCC 49.
56. Bonus	56.1 The Contractor shall be paid a Bonus calculated at the rate per calendar day **stated in the SCC** for each day (less any days for which the Contractor is paid for acceleration) that the Completion is earlier than the Intended Completion Date. The Project Manager shall certify that the Works are complete, although they may not be due to be complete.
57.Advance Payment	57.1 Unless otherwise **stated in SCC,** the Employer shall make advance payment to the Contractor of the amounts stated in the SCC, in two equal installments by the date **stated in the SCC**, against provision by the Contractor of an unconditional bank guarantee from Commercial Bank or Financial Institution eligible to issue Bank Guarantee as per prevailing Law in a form acceptable to the Employer in amounts equal to the advance payment. The guarantee shall remain effective until the advance payment has been repaid, but the amount of the guarantee shall be progressively reduced by the amounts repaid by the Contractor. Interest shall not be charged on the advance payment. The validity of the bank guarantee under this sub-clause shall be at least 30 days beyond the end of intended completion date. The contractor shall submit the list of activities for which the Advance Payment for mobilization to be used along with their time schedules.
	57.2 The Contractor is to use the advance payment only to pay for the purpose of construction site preparation, establishment of temporary camp facilities, construction of workers' housing, mobilization of labors, materials or equipment etc required specifically for execution of the Contract. The Contractor shall demonstrate that advance payment has been used in this way by supplying copies of invoices or other documents to the Project Manager.
	57.3 The advance payment shall be repaid by deducting proportionate amounts, **as stated in SCC**, from payments otherwise due Contractor, following the schedule of completed percentages of the Works on a payment basis. No account shall be taken of the advance payment or its repayment in assessing valuations of work done, Variations, price adjustments, Compensation Events, Bonuses, or Liquidated Damages.
	57.4 If the advance provided under GCC 57.1 is not repaid due to non-performance of the

	works under the contract, by the contractor within the time period specified in the contract, the Employer shall recover the advance by enforcing the bank guarantee as provided under GCC 57.1, and shall also recover interest on the advance amount from the contractor at a rate **stated in SCC.**
58. Securities	58.1 The Performance Security, including any additional security required as per ITB 29.5, shall be provided to the Employer no later than the date specified in the Letter of Acceptance and shall be issued in an amount **specified in the SCC,** by a Commercial Bank or Financial Institution eligible to issue Bank Guarantee as per prevailing Law in Nepal in accordance with the conditions of Contract using Sample Form for the Performance Security included in Section IX (Contract Forms), or another form acceptable to the Employer, and denominated in Nepalese Rupees. The Performance Security shall be valid until a date 30 days beyond the end of the Defect Liability Period. Any additional performance security required as per ITB 29.5 shall be valid until a date 30 days beyond the end of the intended completion date.
	58.2 The performance security issued by any foreign Bank outside Nepal must be counter guaranteed by a Commercial Bank or Financial Institution eligible to issue Bank Guarantee as per prevailing Law in Nepal.
59. Day works	59.1 If applicable, the Day works rates in the Contractor's Bid shall be used for small additional amounts of work only when the Project Manager has given written instructions in advance for additional work to be paid for in that way.
	59.2 All work to be paid for as Day works shall be recorded by the Contractor on forms approved by the Project Manager. Each completed form shall be verified and signed by the Project Manager within two days of the work being done.
	59.3 The Contractor shall be paid for Day works subject to obtaining signed Day works forms.
60. Cost of Repairs	60.1 Loss or damage to the Works or Materials to be incorporated in the Works between the Start Date and the end of the Defects Correction periods shall be remedied by the Contractor at the Contractor's cost if the loss or damage arises from the Contractor's acts or omissions.
F. Force Majeure	
61.Definition of Force Majeure	61.1 In this Clause, "Force Majeure" means an exceptional event or circumstance, (a) which is beyond a Party's control; (b) which such Party could not reasonably have provided against before entering into the Contract; (c) which, having arisen, such Party could not reasonably have avoided or overcome; and (d) which is not substantially attributable to the other Party.
	61.2 Force Majeure may include, but is not limited to, exceptional events or circumstances of the kind listed below, so long as conditions (a) to (d) above are satisfied: (a) war, hostilities (whether war be declared or not), invasion, act of foreign enemies; (b) rebellion, terrorism, sabotage by persons other than the Contractor's Personnel, revolution, insurrection, military or usurped power, or civil war; (c) riot, commotion, disorder, strike or lockout by persons other than the Contractor's Personnel; (d) munitions of war, explosive materials, ionizing radiation or contamination by radio-activity, except as may be attributable to the Contractor's use of such munitions, explosives, radiation or radio-activity; and (e) natural catastrophes such as earthquake, hurricane, typhoon or volcanic activity.

62. Notice of Force Majeure	62.1 If a Party is or will be prevented from performing its substantial obligations under the Contract by Force Majeure, then it shall give notice to the other Party of the event or circumstances constituting the Force Majeure and shall specify the obligations, the performance of which is or will be prevented. The notice shall be given within 14 days after the Party became aware, or should have become aware, of the relevant event or circumstance constituting Force Majeure.
	62.2 The Party shall, having given notice, be excused performance of its obligations for so long as such Force Majeure prevents it from performing them.
	62.3 Notwithstanding any other provision of this Clause, Force Majeure shall not apply to obligations of either Party to make payments to the other Party under the Contract.
63. Duty to Minimize Delay	63.1 Each Party shall at all times use all reasonable endeavors to minimize any delay in the performance of the Contract as a result of Force Majeure.
	63.2 A Party shall give notice to the other Party when it ceases to be affected by the Force Majeure.
64. Consequences of Force Majeure	64.1 If the Contractor is prevented from performing its substantial obligations under the Contract by Force Majeure of which notice has been given under GCC 62, and suffers delay and/or incurs Cost by reason of such Force Majeure, the Contractor shall be entitled subject to GCC 30 to (a) an extension of time for any such delay, if completion is or will be delayed, under GCC35 ; and (b) if the event or circumstance is of the kind described in sub-paragraphs (a) to (d) of GCC 61.2 and, in the case of subparagraphs (b) to (d), occurs in the Country, payment of any such Cost, including the costs of rectifying or replacing the Works and/or Goods damaged or destructed by Force Majeure, to the extent they are not indemnified through the insurance policy referred to in GCC 19.
	64.2 After receiving this notice, the Project Manager shall proceed in accordance with GCC 10 to agree or determine these matters.
65. Force Majeure Affecting Subcontractor	65.1 If any Subcontractor is entitled under any contract or agreement relating to the Works to relief from force majeure on terms additional to or broader than those specified in this Clause, such additional or broader force majeure events or circumstances shall not excuse the Contractor's nonperformance or entitle him to relief under this Clause.
66.Optional Termination, Payment and Release	66.1 If the execution of substantially all the Works in progress is prevented for a continuous period of 90 days by reason of Force Majeure of which notice has been given under GCC 62, or for multiple periods which total more than 150 days due to the same notified Force Majeure, then either Party may give to the other Party a notice of termination of the Contract. In this event, the termination shall take effect 7 days after the notice is given, and the Contractor shall proceed in accordance with GCC 72.5.
	66.2 Upon such termination, the Project Manager shall determine the value of the work done and issue a Payment Certificate, which shall include (a) the amounts payable for any work carried out for which a price is stated in the Contract; (b) the Cost of Plant and Materials ordered for the Works which have been delivered to the Contractor, or of which the Contractor is liable to accept delivery: this Plant and Materials shall become the property of (and be at the risk of) the Employer when paid for by the Employer, and the Contractor shall place the same at the Employer's disposal; (c) other Costs or liabilities which in the circumstances were reasonably and necessarily incurred by the Contractor in the expectation of completing the Works; (d) the Cost of removal of Temporary Works and Contractor's Equipment from the

	Site and the return of these items to the Contractor's works in his country (or to any other destination at no greater cost); and (e) the Cost of repatriation of the Contractor's staff and labor employed wholly in connection with the Works at the date of termination.
67. Release from Performance	67.1 Notwithstanding any other provision of this Clause, if any event or circumstance outside the control of the Parties (including, but not limited to, Force Majeure) arises, which makes it impossible or unlawful for either or both Parties to fulfill its or their contractual obligations or which, under the law governing the Contract, entitles the Parties to be released from further performance of the Contract, then upon notice by either Party to the other Party of such event or circumstance, (a) the Parties shall be discharged from further performance, without prejudice to the rights of either Party in respect of any previous breach of the Contract; and (b) the sum payable by the Employer to the Contractor shall be the same as would have been payable under GCC 66 if the Contract had been terminated under GCC 66.
G. Finishing the Contract	
68. Completion	68.1 The Contractor shall request the Project Manager to issue a certificate of Completion of the Works, and the Project Manager shall do so upon deciding that the work is completed.
	68.2 In addition to the other provisions, before acceptance of the completed works, Employer shall verify and assure that such works are within the set objective, quality and appropriate to operate and use.
69. Taking Over	69.1 In the contractor's Opinion, if the works are complete and ready for taking over, the contractor may apply by notice to the Project Manager for a Taking-Over Certificate. If the Works are divided into Sections, the Contractor may similarly apply for a Taking-Over Certificate for each Section.
	69.2 The Project Manager shall, within 30 days after receiving the Contractor's application: (a) issue the Taking-Over Certificate to the Contractor if physical progress of works is at least ninety (90) percent in accordance with the Contract except for any minor outstanding work and defects (as listed in the Taking-Over Certificate) which will not substantially affect the use of the Works or Section for their intended purpose (either until or whilst this work is completed and these defects are remedied); or (b) reject the application, giving reasons and specifying the work required to be done by the Contractor to enable the Taking-Over Certificate to be issued. The Contractor shall then complete this work before issuing a further notice under this Sub-Clause.
	69.3 If the Engineer fails either to issue the Taking-Over Certificate or to reject the Contractor's application within the period of 30 days, and if the Works or Section (as the case may be) are substantially completed in accordance with the Contract, the Taking-Over Certificate shall be deemed to have been issued on the last day of that period.
70. Final Account	70.1 The Contractor shall supply the Project Manager with a detailed account of the total amount that the Contractor considers payable under the Contract before the end of the Defects Liability Period. The Project Manager shall issue a Defects Liability Certificate and certify any final payment that is due to the Contractor within 60 days of receiving the Contractor's account if it is correct and complete. If it is not, the Project Manager

	shall issue within 60 days a schedule that states the scope of the corrections or additions that are necessary. If the Final Account is still unsatisfactory after it has been resubmitted, the Project Manager shall decide on the amount payable to the Contractor and issue a payment certificate.
71. Operating and Maintenance Manuals	71.1 If "as built" Drawings and/or operating and maintenance manuals are required, the Contractor shall supply them by the **dates stated in the SCC**.
	71.2 If the Contractor does not supply the Drawings and/or manuals by the dates **stated in the SCC** pursuant to **GCC 71.1,** or they do not receive the Project Manager's approval, the Project Manager shall withhold the amount **stated in the SCC** from payments due to the Contractor.
72. Termination	72.1 The Employer may terminate the Contract at any time if the contractor; a. does not commence the work as per the Contract, b. abandons the work without completing, c. fails to achieve progress as per the Contract.
	72.2 The Employer or the Contractor may terminate the Contract if the other party causes a fundamental breach of the Contract.
	72.3 Fundamental breaches of Contract shall include, but shall not be limited to, the following: a) the Contractor uses the advance payment for matters other than the contractual obligations, b) the Contractor stops work for 30 days when no stoppage of work is shown on the current Program and the stoppage has not been authorized by the Project Manager; c) the Project Manager instructs the Contractor to delay the progress of the Works, and the instruction is not withdrawn within 30 days; d) the Employer or the Contractor is made bankrupt or goes into liquidation other than for a reconstruction or amalgamation. e) a payment certified by the Project Manager is not paid by the Employer to the Contractor within 90 days of the date of the Project Manager's certificate; f) the Project Manager gives Notice that failure to correct a particular Defect is a fundamental breach of Contract and the Contractor fails to correct it within a reasonable period of time determined by the Project Manager; g) the Project Manager gives two consecutive Notices to update the Program and accelerate the works to ensure compliance with GCC Sub clause 22.1 and the Contractor fails to update the Program and demonstrate acceleration of the works within a reasonable period of time determined by the Project Manager; h) the Contractor does not maintain a Security, which is required; i) the Contractor has delayed the completion of the Works by the number of days for which the maximum amount of liquidated damages can be paid, **as defined in the SCC**; and j) If the Contractor, in the judgment of the Employer has engaged in corrupt or fraudulent practices in competing for or in executing the Contract, pursuant to GCC 73.1. k) The Contractor fails to submit Performance Security, Advanced Payment Guarantee (if any) and Insurance Policy documents with extended validity within the time prescribed pursuant to GCC 35.3.
	72.4 When either party to the Contract gives notice of a breach of Contract to the Project Manager for a cause other than those listed under GCC 72.3 above, the Project Manager shall decide whether the breach is fundamental or not.
	72.5 Notwithstanding the above, the Employer may terminate the Contract for convenience.
	72.5 Notwithstanding the above, the Employer may terminate the Contract for convenience.

	72.6 If the Contract is terminated, the Contractor shall stop work immediately, make the Site safe and secure, and leave the Site as soon as reasonably possible.
73.Fraud and Corruption	73.1 If the Employer determines that the Contractor has engaged in corrupt, fraudulent, collusive, coercive or obstructive practices, in competing for or in executing the Contract, then the Employer may, after giving 15 days' notice to the Contractor, terminate the Contractor's employment under the Contract and expel him from the Site.
	73.2 Should any employee of the Contractor be determined to have engaged in corrupt, fraudulent, collusive, coercive, or obstructive practice during the execution of the Works, then that employee shall be removed in accordance with GCC Clause 15. For the purposes of this GCC 73; (i) "corrupt practice" is the offering, giving, receiving or soliciting, directly or indirectly, of anything of value to influence improperly the actions of another party. (ii) "fraudulent practice"[5] is any act or omission, including a misrepresentation, that knowingly or recklessly misleads, or attempts to mislead, a party to obtain a financial or other benefit or to avoid an obligation; (iii) "collusive practice"[6] is an arrangement between two or more parties designed to achieve an improper purpose, including to influence improperly the actions of another party; (iv) "coercive practice"[7] is impairing or harming, or threatening to impair or harm, directly or indirectly, any party or the property of the party to influence improperly the actions of a party; (v) "obstructive practice" is (aa) deliberately destroying, falsifying, altering or concealing of evidence material to the investigation or making false statements to investigators in order to materially impede a investigation into allegations of a corrupt, fraudulent, coercive or collusive practice; and/or threatening, harassing or intimidating any party to prevent it from disclosing its knowledge of matters relevant to the investigation or from pursuing the investigation; or (bb) acts intended to materially impede the exercise of the GON's/DP's inspection and audit rights provided for under GCC28.3.
	73.3 The contractor shall be prosecuted for offenses under prevailing criminal laws, if the contractor: (i) Misuses the Advance Payment or payments received from the Employer; (ii) Receives payment by submitting false information or documents; (iii) Abandons the works before completion; (iv) Commits a serious violation of the contract; or (v) Causes loss or damage to the Employer.
74. Black Listing	74.1 Without prejudice to any other rights of the Employer under this Contract, GoN, Public Procurement Monitoring Office (PPMO), on the recommendation of procuring entity, may blacklist a Bidder or contractor for its conduct for a period of one (1) to three (3) years on the following grounds and seriousness of the act committed by the bidder or contractor: (a) if it is established that the Contractor has committed substantial defect in implementation of the contract or has not substantially fulfilled its obligations under the contract or the completed work is not of the specified quality as per the contract. (b) If convicted from a court of law in a criminal offense liable to be disqualified for taking part in procurement contract, (c) If it is established that the Contractor has engaged in corrupt or fraudulent practices in competing for or in executing the Contract.

75. Payment upon Termination	75.1 If the Contract is terminated because of a fundamental breach of Contract by the Contractor, the Project Manager shall issue a certificate for the value of the work done and Materials ordered less advance payments received up to the date of the issue of the certificate. Additional Liquidated Damages shall not apply. If the total amount due to the Employer exceeds any payment due to the Contractor, the difference shall be a debt payable to the Employer.
	75.2 If the Contract is terminated for the Employer's convenience or because of a fundamental breach of Contract by the Employer, the Project Manager shall issue a certificate for the value of the work done, Materials ordered, the reasonable cost of removal of Equipment, repatriation of the Contractor's personnel employed solely on the Works, and the Contractor's costs of protecting and securing the Works, and less advance payments received up to the date of the certificate.
	75.3 If the Contract is terminated because of fundamental breach of Contract or for any other fault by the Contractor, the Employer may: (a) withhold further payments to the Contractor until the costs of design, execution, completion and remedying of any defects, liquidated damages (if any), and all other costs incurred by the Employer, have been established, and/or (b) recover from the Contractor any losses and damages incurred by the Employer and any extra costs of completing the Works, after allowing for any sum due to the Contractor, as Government dues. After recovering any such losses, damages and extra costs, the Employer shall pay any balance to the Contractor. (c) forfeit the Performance Security. If the total amount due to the Employer exceeds any payment due to the Contractor, the difference shall be a debt payable to the Employer.
76. Property	76.1 All Materials on the Site, Plant, Equipment, Temporary Works, and Works shall be deemed to be the property of the Employer if the Contract is terminated because of the Contractor's default.
77.Release from Performance	77.1 If the Contract is frustrated by the outbreak of war or by any other event entirely outside the control of either the Employer or the Contractor, the Project Manager shall certify that the Contract has been frustrated. The Contractor shall make the Site safe and stop work as quickly as possible after receiving this certificate and shall be paid for all work carried out before receiving it and for any work carried out afterwards to which a commitment was made.
78. Suspension of DP Loan/Credit/Grant	78.1 In the event that the DP suspends the loan/ credit/grant to the Employer from which part of the payments to the Contractor are being made: a. the Employer is obligated to notify the Contractor of such suspension within 7 days of having received the DP's suspension notice; and b. if the Contractor has not received sums due him within the 30 days for payment provided for in GCC 49.1, the Contractor may immediately issue a 15-day termination notice.
79. Eligibility	79.1 The Contractor shall have the nationality of an eligible country as specified in Section V of the bidding document. The Contractor shall be deemed to have the nationality of a country if the Contractor is a citizen or is constituted, or incorporated, and operates in conformity with the provisions of the laws of that country. This criterion shall also apply to the determination of the nationality of proposed subcontractors or suppliers for any part of the Contract including related services.
	79.2 The materials, equipment, and services to be supplied under the Contract shall have their origin in eligible source countries **as specified in SCC** and all expenditures under the Contract will be limited to such materials, equipment, and services. At the Employer's request, the Contractor may be required to provide evidence of the origin

	of materials, equipment, and services.
	79.3 For purposes of GCC 79.2, "origin" means the place where the materials and equipment are mined, grown, produced, or manufactured, and from which the services are provided. Materials and equipment are produced when, through manufacturing, processing, or substantial or major assembling of components, a commercially recognized product results that differs substantially in its basic characteristics or in purpose or utility from its components.
80.ProjectManager's Duties and Authorities	80.1 The Project Manager's duties and authorities are restricted to the extent as **stated in the SCC**.
81.Quarries and Spoil Dumps	81.1 Any quarry operated as part of this Contract shall be maintained and left in a stable condition without steep slopes and be either refilled or drained and be landscaped by appropriate planting. Rock or gravel taken from a river shall be removed over some distance so as to limit the depth of material removed at any one location, not disrupt the river flow or damage or undermine the river banks. The Contractor shall not deposit excavated material on land in Government or private ownership except as directed by the Project Manager in writing or by permission in writing of the authority responsible for such land in Government ownership, or of the owner or responsible representative of the owner of such land in private ownership, and only then in those places and under such conditions as the authority, owner or responsible representative may prescribe.
82. Local Taxation	82.1 The prices bid by the Contractor shall include all taxes that may be levied in accordance to the laws and regulations in being in Nepal on the date 30 days prior to the closing date for submissions of Bids on the Contractor's equipment, plant and materials acquired for the purpose of the Contract and on the services performed under the Contract. Nothing in the Contract shall relieve the Contractor from his responsibility to pay any tax that may be levied in Nepal on profits made by him in respect of the Contract.
83. Value Added Tax	83.1 The Contract is not exempted from value added tax. An amount specified in the schedule of taxes shall be paid by the Contractor in the concerned VAT office within time frame specified in VAT regulation.
84. Income Taxes on Staff	84.1 The Contractor's staff, personnel and labor will be liable to pay personal income taxes in Nepal in respect of their salaries and wages, as are chargeable under the laws and regulations for the time being in force, and the Contractor shall perform such duties in regard to such deductions as may be imposed on him by such laws and regulations.
	84.2 The issue of the Final Account Certificate pursuant to clause GCC 70 shall be made only upon submittal by the Contractor of a certificate of income tax clearance from the Government of Nepal.
85. Duties, Taxes and Royalties	85.1 Any element of royalty, duty or tax in the price of any goods including fuel oil, and lubricating oil, cement, timber, iron and iron goods locally procured by the Contractor for the works shall be included in the Contract rates and prices and no reimbursement or payment in that respect shall be made to the Contractor.
	85.2 The Contractor shall familiarize himself with GON the rules and regulations with regard to customs, duties, taxes, clearing of goods and equipment, immigration and the like, and it will be necessary for him to follow the required procedures regardless of the assistance as may be provided by the Employer wherever possible.
	85.3 The Contractor shall pay and shall not be entitled to the reimbursement of cost of extracting construction materials such as sand, stone/boulder, gravel, etc. from the river beds or quarries. Such prices will be levied by the concerned Local Government (LG) as may be in force at the time. The Contractor, sub-contractor(s) employed directly by him and for whom he is responsible, will not be exempted from payment of royalties, taxes or other kinds of surcharges on these construction materials so extracted and paid

	for to the concerned Local Government (LG)
86. Member of Government, etc, not Personally Liable	86.1 No member or officer of GoN or the Employer or the Project Manager or any of their respective employees shall be in any way personally bound or liable for the act or obligations of the Employer under the Contract or answerable for any default or omission in the observance or performance of any of act, matter or thing which are herein contained.
87. Approval of Use of Explosives	87.1 No explosives of any kind shall be used by the Contractor without the prior consent of the Employer in writing and the Contractor shall provide, store and handle these and all other items of every kind whatsoever required for blasting operations, all at his own expense in a manner approved in writing by the Employer.
88 Compliance with Regulations for Explosives	88.1 The Contractor shall comply with all relevant ordinances, instructions and regulations which the Government, or other person or persons having due authority, may issue from time to time regarding the handling, transportation, storage and use of explosives.
89. Permission for Blasting	89.1 The Contractor shall at all times maintain full liaison with and inform well in advance, and obtain such permission as is required from all Government authorities, public bodies and private parties whatsoever concerned or affected, or likely to be concerned or affected by blasting operation.
90.Records of Explosives	90.1 Before the beginning of the Defects Liability Period, the Contractor shall account to the satisfaction of the Project Manager for all explosives brought on to the Site during the execution of the Contract and the Contractor shall remove all unused explosives from the Site on completion of works when ordered by the Project Manager.
91. Traffic Diversion	91.1 The Contractor shall include the necessary safety procedures regarding and pedestrian traffic diversion that is needed in execution of the works. The Contractor shall include in his costing of works, any temporary works or diversion that are needed during the construction period. All traffic diversion should be designed for the safety of both the motoring public and the men at work. It shall ensure the uninterrupted flow of traffic and minimum inconvenience to the public during the period concerned. As such, adequate warning signs, flagmen and other relevant safety precautionary measures shall be provided to warn motorists and pedestrians well ahead of the intended diversion as directed by the Project Manager. All traffic devices used shall be designed in accordance with the instruction of Project Manager.
92. Social Security Fund	92.1 The contractor shall enroll the laborers, employees, or other workforce engaged in such work in the Social Security Fund in accordance with prevailing laws. 92.2 The contractor shall be responsible to disburse the remuneration, benefits, and other payments of the laborers, employees, or workforce into the bank account of the concerned individual. 92.3 The contractor shall be responsible for ensuring that the required work permit has been obtained in accordance with prevailing laws in respect of foreign personnel.

Section VIII: Special Conditions of Contract

The following Special Conditions of Contract shall supplement the GCC. Whenever there is a conflict, the provisions herein shall prevail over those in the GCC.

Sisn Rural Municipality Office, Rukum East

NCB/SRM/WORKS-04/083/084

Special Conditions of Contract

A. General	
GCC 1.1 (p)	The Employer is **Sisn Rural Municipality Office, Rukum East**
GCC 1.1 (u)	The Intended Completion Date for the whole of the Works shall be **30-*Jun 2027***
GCC 1.1(bb) & GCC 10.1	The Project Manager is **CAO** The Project Manager and Engineer are synonyms.
GCC 1.1 (ee)	The Site is located at **Sisne Rural Municipality Sisne-5&6, Rukum (East)** ***and is defined in drawings No.***
GCC 1.1 (hh)	The Start Date shall be **15-11-2026**
GCC 1.1 (ll)	The Works consist of **PCC for RCC Works, Stone Soling Works, Reinforcement Works, DWC Pipes and RCC Drain Construction etc**
GCC 2.2	Sectional Completions are: ***NA***
GCC 2.3 (i)	The following documents also form part of the Contract: ***NA***
GCC 3.1	The language of the contract is **ENGLISH/NEPALI** The law that applies to the Contract is the law of NEPAL
GCC 11.1	The Project Manager ***"may"*** delegate any of his duties and responsibilities.
GCC 12.1 (a)	The agreed electronic transmission shall be: ***sisnermun@gmail.com***
GCC 14.1	Schedule of other contractors: ***NA***
GCC 19.1	The minimum insurance amounts and deductibles shall be: 1. The minimum cover for loss of or damage to the Works, Plant and Materials is: **115 %** of the Contract Amount. 2. The maximum deductible for insurance of the Works and of Plant and Materials is: ***NRs. 20000.00*** 3. The minimum cover for loss or damage to immovable Equipment/plants is: ***100% (i.e Replacement Cost)*** 4. The maximum deductible for insurance of immovable Equipment plant is: ***NRs. 10000*** 5. The minimum cover for loss of or damage to other property is: **500000** with unlimited number of occurrences 6. The maximum deductible for insurance of other property is ***NRs. 50000*** 7. The minimum cover for personal injury or death insurance i. for the Contractor's employees is that specified in the Labor act of Nepal and ii. for other people is***:700,000.00*** with an unlimited number of occurrences
GCC 20.1	Site Investigation Reports are: ***NA***
GCC 23.1	The following shall be designed by the Contractor: ***NA***
GCC 24.2	The contractor shall be responsible for complying with the following requirements during the construction period. Municipality and Technical Assistance Providers will be monitored and verified regularly during the construction phase. **Environmental Compliance and Safeguarding (Include in SCC 24.1)** The contractor shall comply with all applicable environmental regulations and safeguarding standards throughout the duration of the project. Specific responsibilities include: 1. Adoption of environmentally friendly practices, minimizing pollution, waste, and ecological disruption. 2. Implementation of climate-resilient techniques, such as bioengineering works and nature-based solutions, to enhance sustainability and reduce vulnerability to climate impacts. 3. Protection and conservation of natural resources, particularly water sources, must not be disturbed, contaminated, or depleted, during construction activities. 4. Integration of eco-sensitive design and construction methods, including erosion control,

	vegetation preservation, and responsible material use. 5. The contractor shall ensure that all site activities are planned and executed with environmental stewardship as a core principle and shall submit monthly reports demonstrating compliance and mitigation efforts. **Construction Materials Management and Environmental Safeguards (Include in SCC 24.1)** The contractor shall ensure responsible handling, usage, and disposal of all construction materials to minimize environmental impact. Key requirements include: 1. Make arrangements for dust and air pollution control measures. 2. Implement dust suppression measures such as water spraying and covering loose materials. 3. Ensure machinery and vehicles meet emission standards and are regularly maintained. 4. Necessary arrangements shall be made for Solid Waste Management and Construction of solid waste handling. 5. Proper segregation, storage, and disposal of waste including diesel, petrol, plastic, and chemical containers. 6. Hazardous waste must be handled in accordance with national environmental regulations and disposed of only at authorized facilities. 7. Reuse and recycle materials shall be done where feasible (e.g., concrete, metal, wood). 8. Maintain a clean site with designated areas for waste collection and disposal. 9. Provision of Safety Gear for the safety of workers and the Contractor's staff. 10. The contractor should ensure that all workers are provided with appropriate Personal Protective Equipment (PPE) necessary for the nature of their work. 11. Occupational health and safety provisions shall be costed in the BoQ, and shall be provided to all workers and staff. 12. Daily construction health and safety briefing, and warning signs and flags in the construction site shall be provided. **Water, Sanitation and Hygiene facilities arrangements (Include it in SCC 24.1)** 1. The contractor shall be responsible for establishing and maintaining a basic water supply and gender disaggregated sanitation facilities at the project site. This includes provision of drinking water for all workers and staff. Installation and upkeep of separate sanitary toilets for men and women workers and hand washing stations and maintenance of all these water and sanitation facilities throughout the contract period. All arrangements must comply with applicable health, safety, and environmental regulations.
GCC 26.1	The Site Possession Date(s) shall be: ***7 days after contract agreement***
GCC 30.1	The place of arbitration shall be: ***Office of the Sisne Rural Municipality Rukumkot***
C. Time Control	
GCC 34.1	The Contractor shall submit for approval a Program for the Works within **365** days from the date of the Letter of Acceptance.
GCC 34.3	The period between Program updates is **0** days. The amount to be withheld for late submission of an updated Program is **NA NPR**.
D. Quality Control	
GCC 42.1	The Defects Liability Period is: ***365*** days.
E. Cost Control	
GCC 49.1	***prevailing interest rate 10%***
GCC 53.1	The Contract ***is not*** subject to price adjustment, and the following information regarding coefficients ***does not*** apply. The coefficients and indices for adjustment of prices in Nepalese Rupees shall be as specified in the Table of Adjustment Data submitted by bidder together with the Letter of Price Bid which is approved

	by the Project manager and attached as Annex-1.
GCC 53.6	Base Price of Construction Materials applicable for price adjustment shall be as per the Table of Adjustment Data submitted by Bidder together with the Letter of Price Bid which is approved by the Project manager and attached as Annex-1.
GCC 53.7	The Price Adjustment amount shall be limited to a maximum of: ***0*** percentage of the initial Contract Amount (without VAT but including PS).
GCC 54.1	The proportion of payments retained is: 5 (five) percent.
GCC 55.1	The liquidated damages for the whole of the Works are 0.05 Percent of the final Contract Price (without VAT but including PS) per day. The maximum amount of liquidated damages for the whole of the Works is 10 Percent of the final Contract Price (without VAT but including PS).
GCC 56.1	The provision of bonus ***Not Applicable*** in the contract. If Applicable, the Bonus for the whole of the Works is 0.05 Percent of the final Contract Price (without VAT but including PS) per day. The maximum amount of Bonus for the whole of the Works is **0%** of the final Contract Price (without VAT but including PS).
GCC 57.1	The provision of Advance Payments ***Applicable*** in the contract. If Applicable, the Advance Payments shall be: ***20 percent of initial contract amount (without VAT but including PS)*** and shall be paid in two equal installments and to the Contractor. ***First Installment 10.0% submission of APG and Second Installment 10.0% after mobilization at construction site.***
GCC 57.3	Deductions from Payment Certificates will commence in the first certificate in which the value of works executed exceeds 30% of the Contract Price. Deduction will be at the rate of ***20%*** of the respective Monthly Interim Payment Certificate until such time as the advance payment has been repaid; provided that the advance payment shall be completely repaid prior to the end of 80 % of the approved contract price.
GCC 57.4	Recover interest on the advance amount from the Contractor should be at a rate of **10 %**.
GCC 58.1	The Performance Security amount is: **5%**
G. Finishing the Contract	
GCC 71.1	The date by which operating and maintenance manuals are required is; **NA**
GCC 71.2	The date by which "as built" drawings are required is: **NA** The amount to be withheld for failing to produce "as built" drawings and/or Operating and maintenance manuals is: **0 NPR**
GCC 72.3 (i)	The maximum number of days is: **200**
GCC 79.2	*GoN Funded* For GoN funded: For the purpose of Country of Origin: "all Countries"
GCC 80	The Project Manager has to obtain the specific approval of the Employer for taking any of the following actions: a. Approving subcontracting of any part of the works under General Conditions of Contract Clause 13; b. Certifying additional costs determined under General Conditions of Contract Clause 50; c. Determining start date under General Conditions of Contract Clause 1; d. Determining the extension of the intended Completion Date under General Conditions of Contract Clause 35; e. Issuing a Variation under General Conditions of Contract Clause 1 and 46, except in an emergency situation, as reasonably determined by the Project Manager; emergency situation may be defined as the situation when protective measures must be taken for the safety of life or of the works or of adjoining property. f. Adjustment of rates under General Conditions of Contract Clause 45;

Section IX: Contract Forms

This Section contains forms which, once completed, will form part of the Contract. The forms for Performance Security and when required Advance Payment Security and Retention Money Security, shall only be completed by the successful Bidder after contract award.

Letter of Intent

[on letterhead paper of the Employer]

Date: ... ……

To: .....***Name and address of the Contractor***.....

Subject: …… Issuance of letter of intent to award the contract.....

This is to notify you that, it is our intention to award the contract ... . ***[insert date]*** .....for execution of the ..... ***[insert name of the contract and identification number, as given in the Contract BDS/SCC]*** to you as your bid price ***Nepalese Rupees*** ..... ***[insert amount of contract price in figures and words including taxes]*** as corrected and modified in accordance with the Instructions to Bidders is hereby selected as substantially responsive evaluated bid closest to the Average Bid Price.

Authorized Signature: ……

Name: ... …….

Title: …….

CC:

[Insert name and address of all other Bidders, who submitted the bid]

Letter of Acceptance

[on letterhead paper of the Employer]

Date: ……..

To: ……***Name and address of the Contractor***……...

Subject: ……*Notification of Award*

This is to notify that your Bid for the Invitation of Bids dated **.....*[Insert date of bid invitation]*** ……..for execution of the……..***[Insert name of the contract and identification number, as given in the Contract BDS/SCC]*** ……... for the Contract price of Nepalese Rupees ***[insert amount in figures and words including taxes],*** as corrected in accordance with the Instructions to Bidders is hereby accepted in accordance with the Instruction to Bidders.

You are hereby instructed to contact this office to sign the formal contract agreement within 15 days with Performance Security of **NRs**. ……. in accordance with the Conditions of Contract, using for that purpose the Performance security Form included in Section X (Contract Forms) of this Bidding Document.

Authorized Signature: ……...

Name and Title of Signatory: ……

Contract Agreement

THIS AGREEMENT made the .....day of…..between……. name of the Employer ***……(hereinafter "the Employer"),*** of the one part, and ……name of the Contractor ……(hereinafter "the Contractor"), of the other part:

WHEREAS the Employer desires that the Works known as ……... name of the Contract .....should be executed by the Contractor, and has accepted a Bid by the Contractor for the execution and completion of these Works and the remedying of any defects in the sum of NRs ***….....…..[insert amount of contract price in words and figures including taxes]***(hereinafter "the Contract Price").

The Employer and the Contractor agree as follows:

1. In this Agreement words and expressions shall have the same meanings as are respectively assigned to them in the Contract documents referred to.

2. The following documents shall be deemed to form and be read and construed as part of this Agreement. This Agreement shall prevail over all other Contract documents.
   (a) the Letter of Acceptance;
   (b) the Letter of Bid;
   (c) the Addenda Nos ..... ***[Insert addenda numbers if any]***
   (d) the Special Conditions of Contract;
   (e) the List of Eligible Countries as per GCC,
   (f) the General Conditions of Contract;
   (g) the Specification;
   (h) the Drawings;
   (i) Bill of Quantities (or Schedules of Prices for lump sum contracts), and
   (j) Table of Price Adjustment Data
   (k) List of Approved Subcontractors
   (l).....***[Specify if there are any other document]***

3. In consideration of the payments to be made by the Employer to the Contractor as indicated in this Agreement, the Contractor hereby covenants with the Employer to execute the Works and to remedy defects therein in conformity in all respects with the provisions of the Contract.

4. The Employer hereby covenants to pay the Contractor in consideration of the execution and completion of the Works and the remedying of defects therein, the Contract Price or such other sum as may become payable under the provisions of the Contract at the times and in the manner prescribed by the Contract.

IN WITNESS whereof the parties hereto have caused this Agreement to be executed in accordance with the laws of Nepal on the day, month and year indicated above.

Signed by …….
for and on behalf the Contractor in the presence of
Witness, Name, Signature, Address, Date

Signed by……..
for and on behalf of the Employer in the presence of
Witness, Name, Signature, Address, Date

Witness, Name Signature, Address, Date List of Approved Subcontractors

In accordance with GCC Sub-Clause 13.1, The following Subcontractors are approved for carrying out the work as specified below.

Name of Subcontractors	Description of Works	Value/Percentage of subcontract

Performance Security

(On letterhead paper of the Bank)

..... ***Bank's Name, and Address of Issuing Branch or Office*** .....

Beneficiary: ..... ***[Insert Name and Address of Employer]*** …….....
Date: .....

Performance Guarantee No.:…….

We have been informed that ... ... ***[insert name of the Contractor, which in the case of a joint venture shall be the name of the joint venture]*** (hereinafter called "the Contractor") has been notified by you to sign the Contract No. …….. ***[insert reference number of the Contract]*** for the execution of …….. ***[insert name of contract and brief description of Works]*** (hereinafter called "the Contract").

Furthermore, we understand that, according to the conditions of the Contract, a performance guarantee is required.

At the request of the Contractor, we..... . ***[insert name of the Bank]*** hereby irrevocably undertake to pay you any sum or sums not exceeding in total an amount of Nepalese Rupees .....***[insert amount in figures* and amount in words)*** such sum being payable in Nepalese Rupees, upon receipt by us of your first demand in writing accompanied by a written statement stating that the Contractor is in breach of its obligation(s) under the Contract, without your needing to prove or to show grounds for your demand or the sum specified therein.

This guarantee shall expire, no later than the……***[insert day]***……..Day of ……***[insert month, year]***…… **, and any demand for payment under it must be received by us at this office on or before that date.

This guarantee is subject to the Uniform Rules for Demand Guarantees (URDG), 2010 Revisions,, ICC Publication No. 758 , .except that the supporting statement under Article 15(a) is hereby excluded..

……

Seal of Bank and Signature(s)

Advance Payment Security

(On letterhead paper of the Bank)

…….. Bank's Name, and Address of Issuing Branch or Office.....

Beneficiary: ……***[Insert Name and address of employer]***

Date : ……

Advance Payment Guarantee No……..

We have been informed that **……** ***[insert name of the Contractor, which in the case of a joint venture shall be the name of the joint venture]*** (hereinafter called "the Contractor") has entered into Contract No. ..... ***[insert refrence number of the contract]*** ……dated …… ***[insert agreement date]*** with you, for the execution of ***.....[Insert name of the contract and brief description of Works]*** (hereinafter called "the Contract").

Furthermore, we understand that, according to the Conditions of the Contract, an advance payment in the sum Nepalese Rupees ……. ***[insert amount in figures*and in words]*** is to be made against an advance payment guarantee.

At the request of the Contractor, we... ..... . ***[insert name of the Bank]*** hereby irrevocably undertake to pay you any sum or sums not exceeding in total an amount of Nepalese Rupees ……***[insert*** amount in figures***. =and amount in words]*** upon receipt by us of your first demand in writing accompanied by a written statement stating that the Contractor is in breach of its obligation under the Contract because the Contractor:

(a) Used the advance payment for purposes other than the costs of mobilization in respect of the Works. Or

(b) .Has failed to repay the advance payment when it has become due and payable in accordance with the conditions of the contract, specifying the amount payable by the contractor.

The maximum amount of this guarantee shall be progressively reduced by the amount of the advance payment repaid by the Contractor as indicated in copies of interim statements or payment certificates which shall be presented to us. This guarantee shall expire, at the latest, upon our receipt of a copy of the interim payment certificate indicating that eighty (80) percent of the Contract Price has been certified for payment, or on the .. ***[insert day]***..... day of ... ***[insert month, year]***...**, whichever is earlier. Consequently, any demand for payment under this guarantee must be received by us at this office on or before that date.

This guarantee is subject to the Uniform Rules for Demand Guarantees (URDG), 2010 Revisions,, ICC Publication No. 758 , except that the supporting statement under Article 15(a) is hereby excluded..

……

Seal of Bank and Signature(s)

Retention Money Security

(On letterhead paper of the Bank)
..... ***Bank's Name, and Address of Issuing Branch or Office***.....

Beneficiary: _____ ***[Insert name and Address of Employer]***

Date: _____***[Insert date of issue]***

RETENTION MONEY GUARANTEE No.: ***[Insert guarantee reference number]***

We have been informed that _____ ***[insert name of Contractor, which in the case of a joint venture shall be the name of the joint venture]*** (hereinafter called "the Contractor") has entered into Contract No. _____ ***[insert reference number of the contract]*** dated _____ with the Beneficiary, for the execution of _____ ***[insert name of contract and brief description of*** **Works*]*** (hereinafter called "the Contract").

Furthermore, we understand that, according to the conditions of the Contract, the Beneficiary retains moneys up to the limit set forth in the Contract ("the Retention Money"), and that when at least eighty (80) percent of the whole works have been completed, progress of the works is satisfactory in accordance with the Contract as per approved work schedule and it can be assured that the works can be completed at the intended completion date, payment of ***[insert the amount of the Retention Money]*** is to be made against a Retention Money guarantee.

At the request of the Contractor, we, .. . ***[insert name of the Bank]*** ……., as Guarantor, hereby irrevocably undertake to pay the Beneficiary any sum or sums not exceeding in total an amount of Nepalese Rupees _____ ***[insert amount in figures andamount in words]***[1] upon receipt by us of the Beneficiary's complying demand supported by the Beneficiary's statement, whether in the demand itself or in a separate signed document accompanying or identifying the demand, stating that the Contractor is in breach of its obligation(s) under the Contract, without your needing to prove or show grounds for your demand or the sum specified therein.

This guarantee shall expire no later than the …***[insert day]***... day of ……***[insert month, year***… [2], and any demand for payment under it must be received by us at the office indicated above on or before that date.
This guarantee is subject to the Uniform Rules for Demand Guarantees (URDG), 2010 Revisions,, ICC Publication No. 758 , except that the supporting statement under Article 15(a) is hereby excluded.

……
Seal of Bank and Signature(s)

_____

Annex-1

Table of Price Adjustment Data
[GCC 53.1]

Code	Index Description	Source of Index*	Base Value and Date	Employer's Proposed Weighting Range (coefficient)	Bidder's Proposed Weighting (coefficient)**
1	2	3	4	5	6
	Non - adjustable (A)			0.15	0.15
	Labor (b)				
	Materials (c)				
	…				
	Equipment usage (d)				
		Total			**1.00**

Note: Base value and Bidder's proposed weighting coefficient to be filled as per "Bid Form of Table of Price Adjustment Data" in Bidding Forms (Section-IV) after verification by the Employer in case of the alternative provision of Bidder proposed value and weighting coefficient.

Table of Price Adjustment Data
[GCC 53.6]

Code	Construction Material*	Unit	Base Price (NRs/Unit) ** (Ex-factory)	Source (Factory)**
1	2	3	4	5

** For the purpose of calculation of price adjustment, the Ex-factory price of the same source mentioned in the table shall be taken into consideration.